STEREO AMPLIFIER

SA-9500

KCU, D, GN

<ART-124-0>

Service Manual

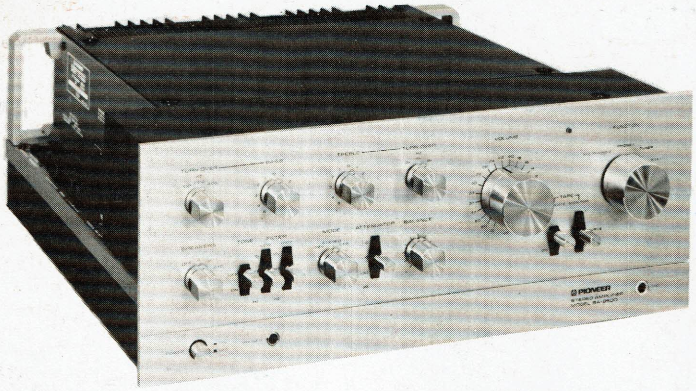

CONTENTS

1. SPECIFICATIONS 2
2. FRONT PANEL FACILITIES 3
3. CONNECTION DIAGRAM 5
4. BLOCK DIAGRAM 7
5. CIRCUIT DESCRIPTION 9
6. LEVEL DIAGRAM 13
7. DISASSEMBLY 14
8. PARTS LOCATIONS 20
9. ADJUSTING PROCEDURES 26
10. EXPLODED VIEW 28
11. SCHEMATIC DIAGRAMS, P.C. BOARD PATTERNS AND PARTS LIST
 11.1 Schematic Diagrams and Miscellaneous Parts 44
 11.2 Volume Assembly (AWX-073) 53
 11.3 Input Circuit Assembly (AWK-039) 54
 11.4 Switch Circuit Assembly (AWS-082) 58
 11.5 Control Amplifier Assembly (AWG-032) 62
 11.6 Fuse Assembly (AWX-088), (AWX-085) or (AWX-086) 67
 11.7 Power Amplifier Assembly (AWH-041) 68
 11.8 Protection Circuit Assembly (AWM-074) 73
 11.9 Power Supply Circuit Assembly–2 (AWR-075) or (AWR-090) 76
 11.10 Power Supply Circuit Assembly–1 (AWR-074) or (AWR-089) 79
12. PACKING 80
13. PARTS LIST OF EXPLODED VIEW 81

NOTE:
THE MODEL SA-9500 COMES IN THREE VERSIONS DISTINGUISHED AS FOLLOWS:

Round label on rear panel	Voltage	Type
KCU	120V only	UL (U.S.A.), CSA (Canada) approved.
D	120V, 220V, and 240V (switchable)	General export model.
GN	220V only	SEMKO (Sweden), DEMKO (Denmark), NEMKO (Norway) and EI (Finland) approved.

1. SPECIFICATIONS

Semiconductors

FET(s)	2
Transistors	54
Diodes	26

Power Amplifier Section

Circuitry	1st stage differential amplifiers. Parallel push-pull, direct coupled OCL.
Continuous Power Output from 20Hertz to 20,000 Hertz (Both channels driven)	80 watts per channel (8 ohms) 100 watts per channel (4 ohms)
at 1,000 Hertz (Both channels driven)	85 watts per channel (8 ohms) 110 watts per channel (4 ohms)
Total Harmonic Distortion at 20 Hertz to 20,000 Hertz	
(Continuous Rated Power Output)	No more than 0.1%
(40 watts per channel Power Output, 8 ohms)	No more than 0.05%
(1 watt per channel Power Output, 8 ohms)	No more than 0.05%
Intermodulation Distortion at 20 Hertz to 20,000 Hertz	
(Continuous Rated Power Output)	No more than 0.1%
(40 watts per channel Power Output, 8 ohms)	No more than 0.05%
(1 watt per channel Power Output, 8 ohms)	No more than 0.05%
Frequency Response	10 Hertz to 80,000 Hertz $^{+0}_{-1}$ dB
Input: Sensitivity/Impedance (POWER AMP IN)	1V/50 k ohms
Output: Speaker	A, B, A+B
Headphone	Low Impedance
Damping Factor (20 Hertz to 20,000 Hertz, 8 ohms)	30
Hum & Noise (IHF, Short-circuited, A Network)	100dB

Preamplifier Section

Circuitry	
Equalizer amplifier	3-stage direct-coupled class-A SEPP type with 1st stage differential amplifier.
Control amplifier	2-stage direct-coupled with one FET, NFB type.
Input: Sensitivity/Impedance	
PHONO 1	2.5mV/50 k ohms
PHONO 2	2.5mV to 10mV/35 k ohms, 50 k ohms, 70 k ohm, 100 k ohms
MIC	6mV to 24mV/85 k ohms
TUNER	150mV/50 k ohms
AUX 1	150mV/50 k ohms
AUX 2	150mV/50 k ohms
TAPE PB 1	150mV/50 k ohms
TAPE PB 2	150mV/50 k ohms
PHONO Overload Level (T.H.D. 0.01%)	
PHONO 1	250mV (1,000 Hertz)
PHONO 2	250mV to 500mV (1,000 Hertz)
Output: Level/Impedance	
TAPE REC 1	150mV
TAPE REC 2	150mV
PRE OUT	2V/1 k ohms
Total Harmonic Distortion at 20 Hertz to 20,000 Hertz	No more than 0.05%
Frequency Response	
PHONO (RIAA equalization).	30 Hertz to 15,000 Hertz ±0.2dB
TUNER, AUX, TAPE PB	7 Hertz to 40,000 Hertz $^{+0}_{-1}$dB
Tone Control (2dB step)	
BASS	±10dB (25 Hertz/50 Hertz/100 Hertz) (Turnover Frequency) 100 Hertz/200 Hertz/400 Hertz
TREBLE	±10dB (8,000 Hertz/16,000 Hertz/32,000 Hertz) (Turnover Frequency) 2,000 Hertz/4,000 Hertz/8,000 Hertz
Filter	
LOW	15 Hertz, 30 Hertz (12dB/oct.)
HIGH	8,000 Hertz, 12,000 Hertz (12dB/oct.)
Hum & Noise (IHF, Short circuited, A Network)	
PHONO 1 & 2	More than 70dB
MIC	More than 65dB
TUNER, AUX 1 & 2, TAPE PB 1 & 2	More than 90dB
Attenuator	0, −15dB, −30dB

Miscellaneous

Power Requirements	AC 120V 60Hertz or 220V 50/60 Hertz or 120, 220 and 240V (Switchable) 50/60 Hertz
Power Consumption	370W(120V model only) or 310W
AC Outlets	2 (Switched), 1 (Unswitched)
Dimensions	420 (W) x 165 (H) x 403 (D) mm 16-1/2 x 6-1/2 x 15-7/8 in.
Weight: Without Package	17.2kg (37lb13oz)
With Package	20kg (44lb)

Furnished Parts

Hex. Wrench (used for fasting VOLUME knob)	1
Jack covers (input, output)	22
AC outlet covers (3-line voltage model only)	3
Fuse 6A	1 (3-line voltage model only)
Fuses 3A	2 (3-line voltage model only)
Connection Cord with Pin Plugs	1
Factory Tested Data	1
Operating Instructions	1

NOTE:
Specifications and the design subject to possible modification without notice due to improvements.

2. FRONT PANEL FACILITIES

RESPONSE GRAPH

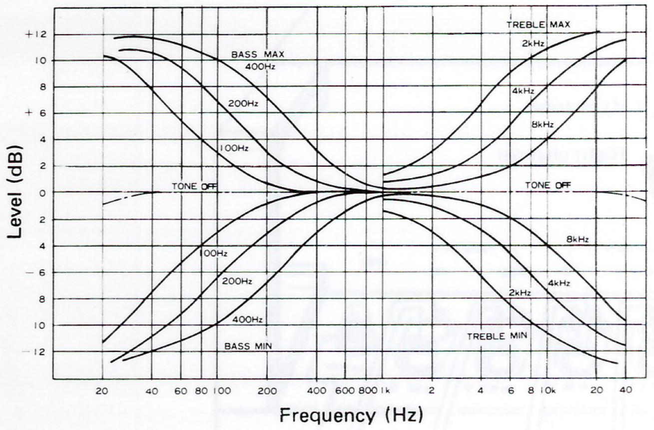

BASS TURN OVER SWITCH

As shown in the response graph, this switch selects the frequency at which the BASS control takes effect. Set the switch to 100Hz, 200Hz, or 400Hz according to the listening room and speaker charcateristics, or personal preference.

BASS CONTROL

Control for adjusting low frequency sound. When turned clockwise from center, frequencies below the value selected by the BASS TURN OVER switch are enhanced, while counter-clockwise rotation attenuates these frequencies. The control functions in 2dB steps.

TREBLE CONTROL

Control for adjusting high frequency sound. When turned clockwise from center, frequencies above the value selected by the TREBLE TURN OVER switch are enhanced, while counter-clockwise rotation attenuates these frequencies. The control functions in 2dB steps.

TREBLE TURN OVER SWITCH

As shown in the response graph, this switch selects the frequency at which the TREBLE control takes effect. Set the switch to 2kHz, 4kHz, or 8kHz according to listening room and speaker characteristics, or personal preference.

VOLUME CONTROL

Adjusts output level to speakers and headphones.
Scale is graduated in dB with 0dB at maximum level. When employed in combination with the ATTENUATOR switch, finer and wider range attenuation can be performed.

PILOT LAMP

Lights when AC power is turned on.

FUNCTION SWITCH

PHONO 1:	For playing records on a turntable connected to the PHONO 1 jacks.
MIC/PHONO 2:	Same as above, for PHONO 2 jacks, or for reproduction through a microphone connected to the MIC jack on the front panel. Note, when the microphone is connected to the jack, the turntable connected to the PHONO 2 jacks cannot be used.
TUNER:	For listening to broadcasts through the tuner.
AUX 1:	For playing signals fed to the AUX 1 jacks.
AUX 2:	Same as above, for AUX 2 jacks.

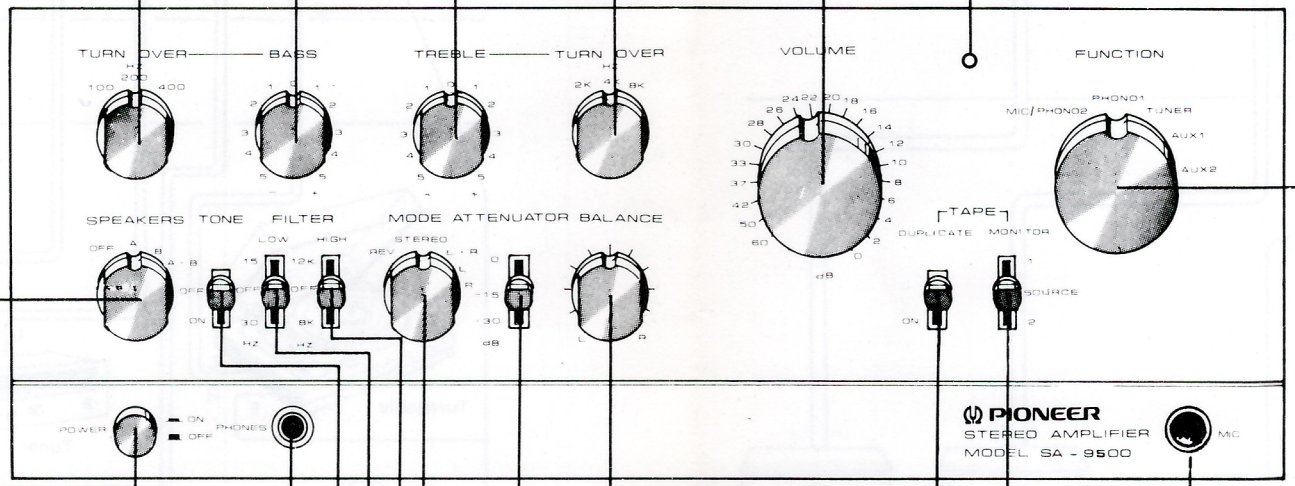

SPEAKERS SWITCH

OFF:	Cuts off speaker sound (when using headphones only).
A:	Sound obtained from speakers connected to A speaker terminals.
B:	Sound obtained from speakers connected to B speaker terminals.
A + B:	Sound obtained from speakers connected to both A and B speaker terminals.

POWER SWITCH

Depress to turn on AC power.
After the POWER switch is set to ON, a few seconds will elapse before sound is obtained. This is due to the built-in muting circuit and does not signify difficulty.

PHONES JACK

Output jack for stereo headphones.

TONE SWITCH

When set to OFF, the TONE control circuit is disengaged and frequency response becomes flat. The BASS and TREBLE twin controls do not function at this time.
Convenient for checking phono cartridge and speaker tone, tone control effectiveness, and listening room acoustics.

LOW FILTER SWITCH

Attenuates low frequency noise.

15Hz:	Provides 12dB/octave attenuation for frequencies below 15Hz.
OFF:	Set to this position when not employing filter.
30Hz:	Provides 12dB/octave attenuation for frequencies below 30Hz.

HIGH FILTER SWITCH

Attenuates high frequency noise, such as scratches and tape hiss.

12kHz:	Provides 12dB/octave attenuation for frequencies above 12kHz.
OFF:	Set to this position when not employing filter.
8kHz:	Provides 12dB/octave attenuation for frequencies above 8kHz.

ATTENUATOR SWITCH

Attenuates the output level as follows:

0dB:	No attenuation
−15dB:	Attenuates by 15dB
−30dB:	Attenuates by 30dB

MODE SWITCH

REV:	Reverses left and right channel stereo signals.
STEREO:	Normal stereo reproduction.
L + R:	Mixes left and right channel signals for mono reproduction.
L:	Mono reproduction of left channel signal through both speakers.
R:	Mono reproduction of right channel signal through both speakers.

MIC JACK

Accepts the plug of the microphone.

TAPE MONITOR SWITCH

1 :	Playback or monitoring of tape deck connected to the TAPE 1 (REC & PB) jacks.
SOURCE:	Set to this position at times other than tape playback.
2:	Playback or monitoring of tape deck connected to the TAPE 2 (REC & PB) jacks.

TAPE DUPLICATE SWITCH

Set to ON when employing 2 tape decks to duplicate or edit tapes. Be sure to set to OFF (upper position) at other times.

BALANCE CONTROL

Adjusts left and right volume balance of speakers and headphones. Turn clockwise from center to increase right channel (R) volume, and counterclockwise from center to increase left channel (L) volume.

3. CONNECTION DIAGRAM

NOTE:
Line voltage selector is not equipped in 120V model.

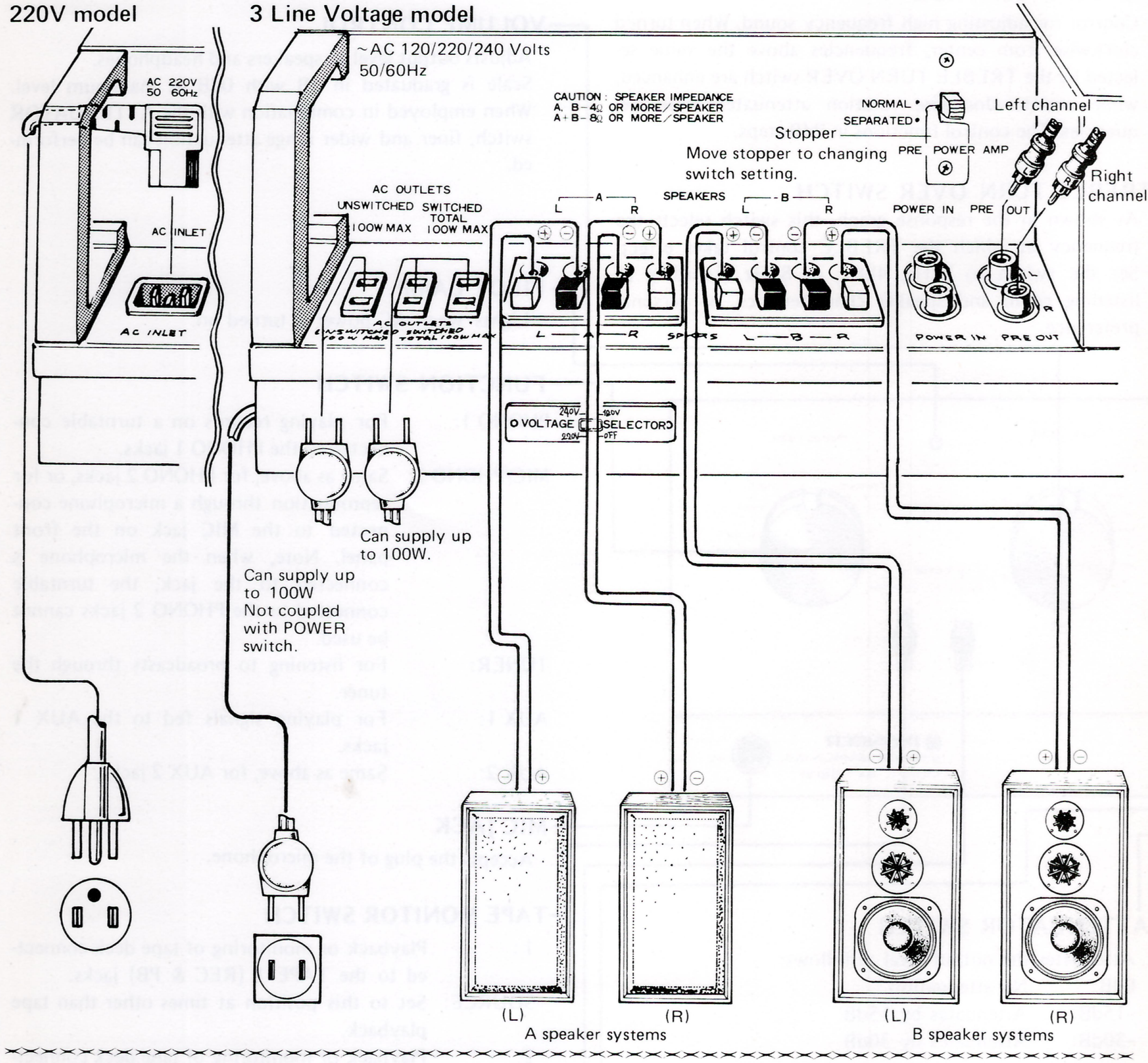

Cautions When Connecting

- Observe both the channels and polarities of the inputs and outputs of the components connected to the SA-9500. Be sure to connect L to L, R to R, + to +, and − to −.
- Make all connections securely.
  Loose connections can cause absence of sound or noise.

Install furnished covers on unused AC outlets, and input and output to protect from dust.

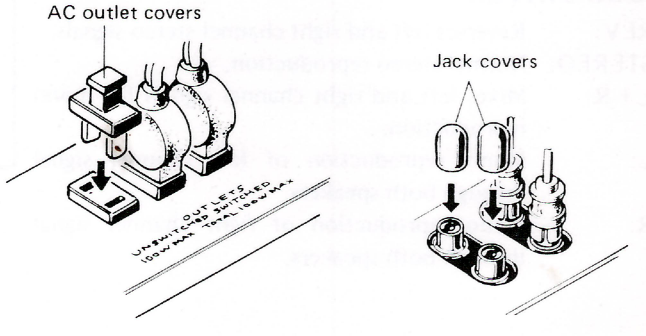

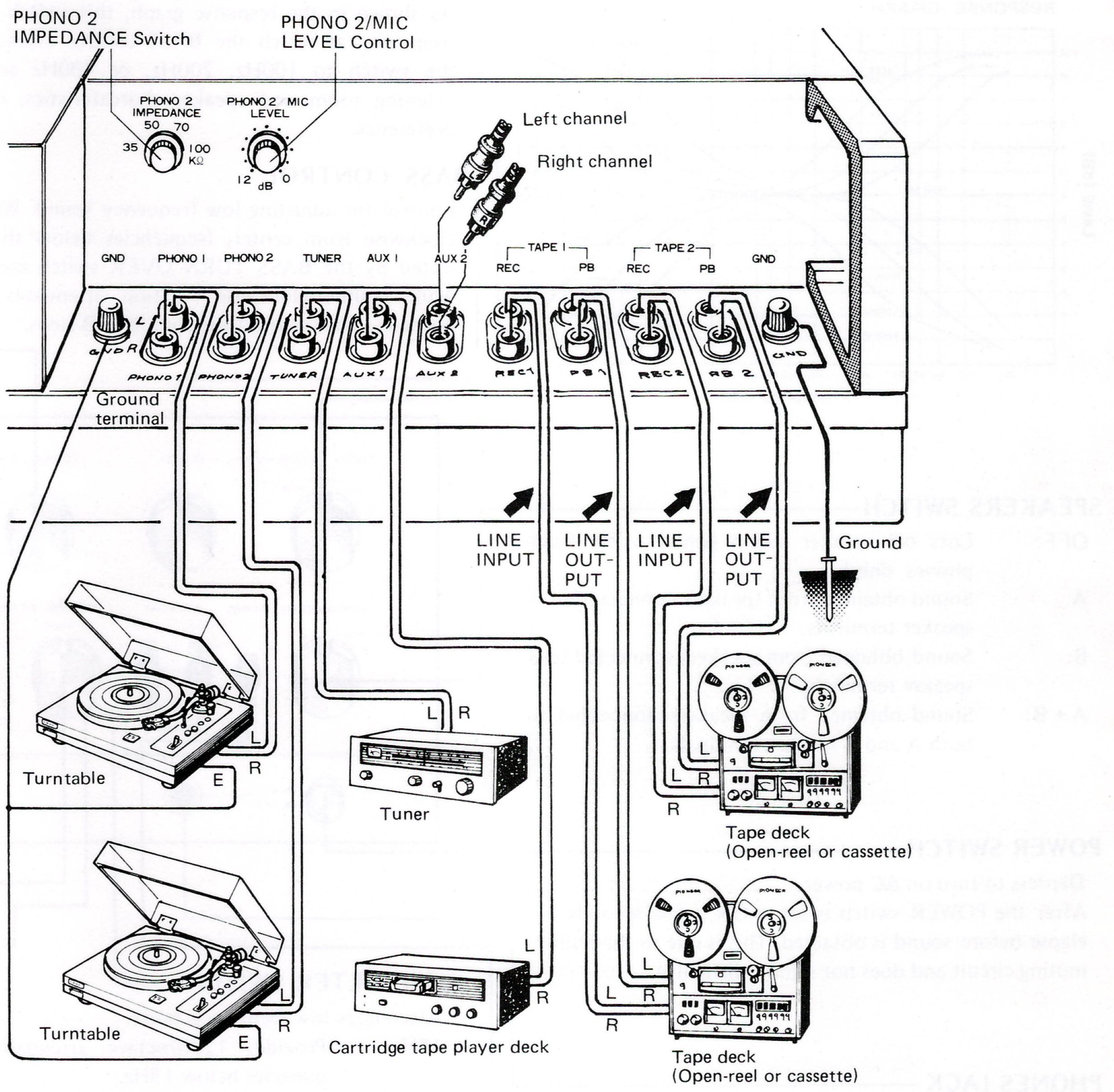

Get connecting cords through lead wire guide.

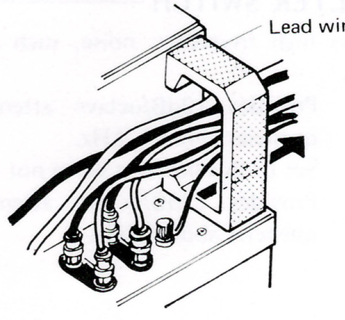

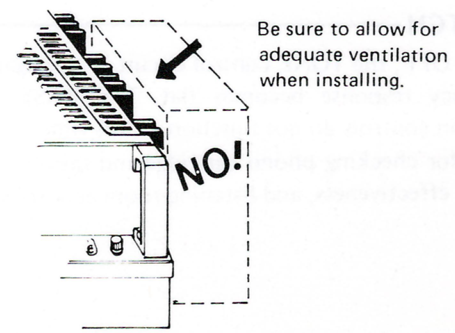

4. BLOCK DIAGRAM

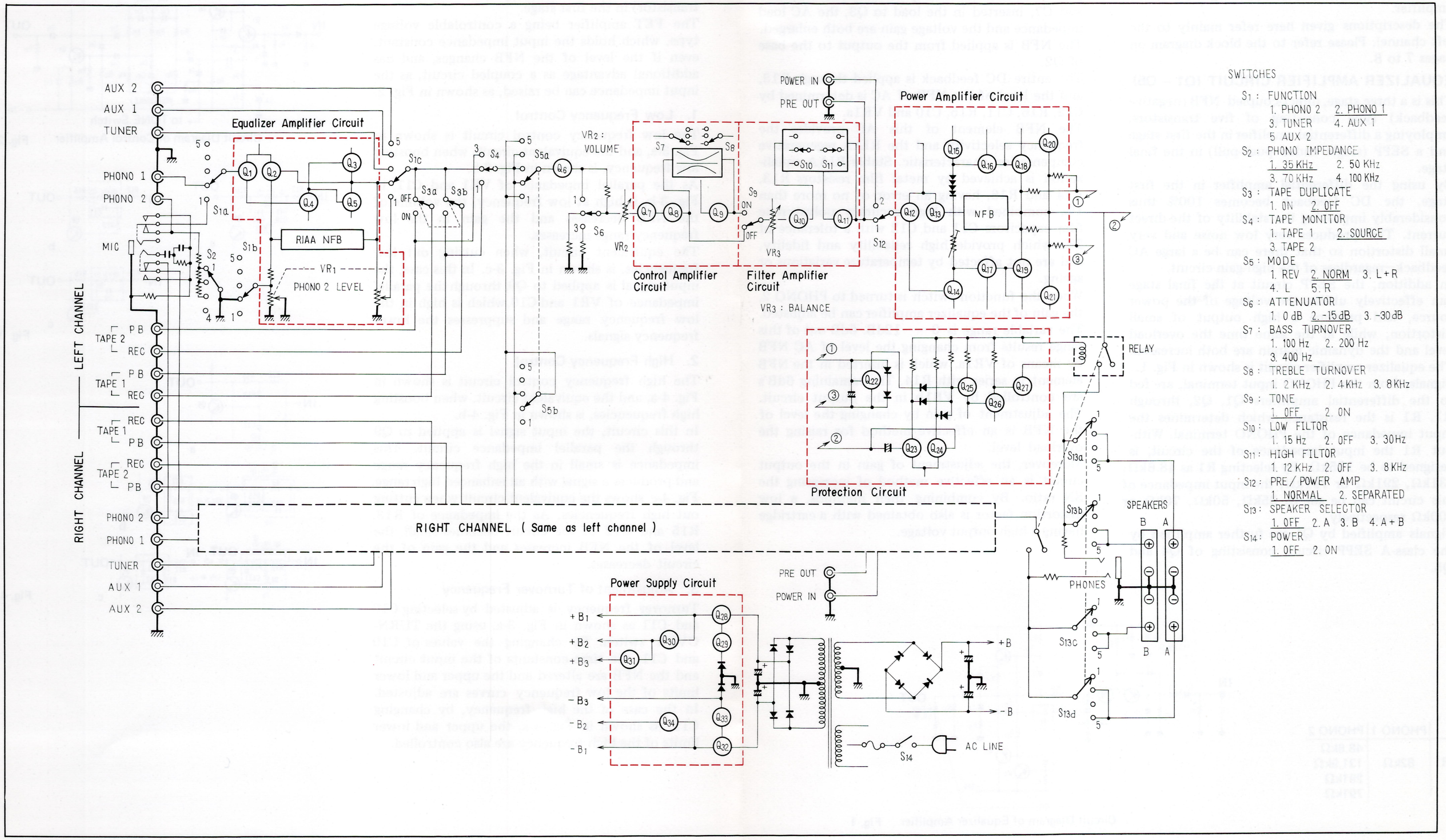

5. CIRCUIT DESCRIPTION

The SA-9500 is a 2-channel integrated stereo amplifier.
The descriptions given here refer mainly to the left channel. Please refer to the block diagram on pages 7 to 8.

EQUALIZER AMPLIFIER CIRCUIT (Q1 – Q5)

This is a three stage, direct-coupled NFB (negative feedback) type consisting of five transistors; employing a differential amplifier in the first stage and a SEPP (single ended push-pull) in the final stage.
By using the differential amplifier in the first stage, the DC feedback becomes 100% thus considerably improving the stability of the direct current. This produces very low noise and very small distortion so that there can be a large AC feedback—regardless of the high-gain circuit.
In addition, the SEPP circuit at the final stage can effectively utilize the voltage of the power source, and produce a high output of small distortion, while at the same time the overload level and the dynamic margin are both increased.
The equalizer amplifier circuit is shown in Fig. 1.
Signals, from the PHONO input terminal, are fed to the differential amplifiers Q1, Q2, through R1. R1 is the resistance which determines the input impedance of the PHONO terminal. Without R1 the input impedance of the circuit, is designed to be 125kΩ. By selecting R1 as 48.6kΩ, 131kΩ, 291kΩ or 791kΩ, the input impedance of this circuit can be set to 35kΩ, 50kΩ, 70kΩ or 100kΩ respectively.
Signals amplified by Q1 are further amplified by the class-A SEPP circuit, consisting of Q4 and Q5.

Due to the boot-strap circuits of R9, R10 and C7, inserted in the load to Q3, the AC load impedance and the voltage gain are both enlarged.
The NFB is applied from the output to the base of Q2.
The entire DC feedback is applied through R13, and the level of the NFB of AC is determined by C12, R16, C11, R15, C10 and VR1a.
The NFB element of this AC provides the frequency selectivity and the RIAA regenerative compensation characteristic. Stable RIAA equalization is achieved by metal film resistors R13, R14 and R16, having an error of no more than 1%, combined with high accuracy polystyrene film capacitors C11 and C12 with a tolerance of 2%, which provide high reliability and fidelity, and are not affected by temperature variations or ageing.
When the function switch is turned to PHONO 2, the gain of the equalizer amplifier can be adjusted. The variable range is 0 — −12dB. 6dB out of this range results from changing the level of AC NFB by means of VR1a, which is inserted in the NFB element in series with R14. The remaining 6dB's are controlled by VR1b in the output circuit.
The adjustment of gain by changing the level of the NFB is an effective method for raising the overload level.
Moreover, the adjustment of gain in the output circuit is an effective method of increasing the SN ratio. By combining their methods, a low distortion factor is also obtained with a cartridge having a high output voltage.

*	PHONO 1	PHONO 2
R1	82kΩ	48.6kΩ 131.9kΩ 291kΩ 791kΩ

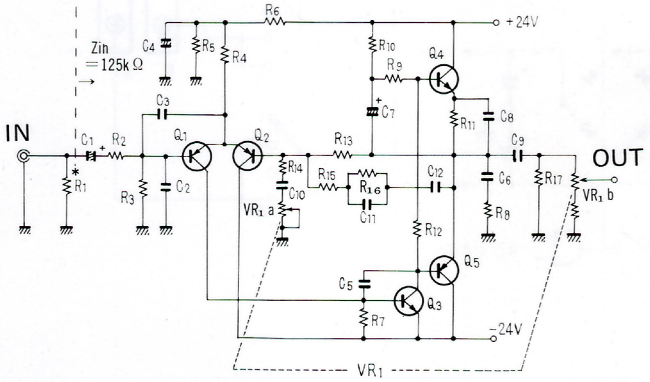

Circuit Diagram of Equalizer Amplifier Fig. 1

CONTROL AMPLIFIER CIRCUIT (Q7 – Q9)

The control amplifier circuit of the SA-9500 is the NFB type, using a FET (field effect transistor) in the first stage.
The FET amplifier being a controlable voltage type, which holds the input impedance constant, even if the level of the NFB changes, and has additional advantage as a coupled circuit, as the input impedance can be raised, as shown in Fig. 2.

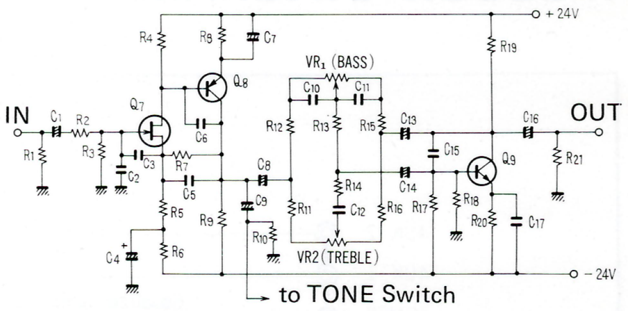

Circuit Diagram of Control Amplifier Fig. 2

1. Low Frequency Control

The low frequency control circuit is shown in Fig. 3-a, and the equivalent circuit, when boosting low frequency, is shown in Fig. 3-b.
As the parallel impedance of VR1 and C11, in Fig. 3-b, is high at low frequency, the volume of the NFB decreases and the gain in the low frequency range increases.
The equivalent circuit, when cutting out low frequencies, is shown in Fig. 3-c. In this case, the input signal is applied to Q9, through the parallel impedance of VR1 and C10, which is high in the low frequency range and suppresses the lower frequency signals.

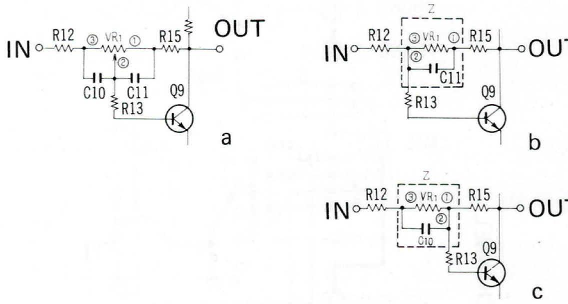

Fig. 3

2. High Frequency Control

The high frequency control circuit is shown in Fig. 4-a, and the equivalent circuit, when boosting high frequencies, is shown in Fig. 4-b.
In this circuit, the input signal is applied to Q9 through the parallel impedance circuit. This impedance is small in the high frequency range and produces a signal with an enhanced high range.
Fig. 4-c shows the equivalent circuit when cutting out high frequencies. As the impedance of R13, R15 and C12 of the circuit becomes small, the level of the NFB increases and the gain of the circuit decreases.

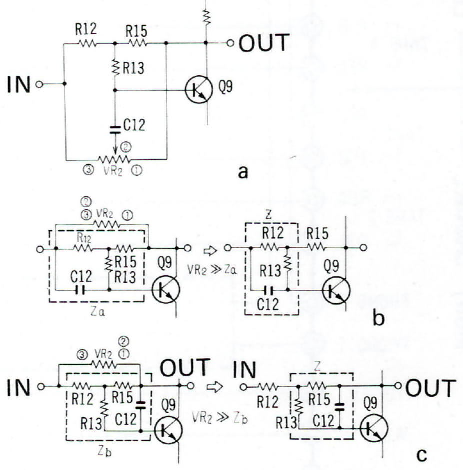

Fig. 4

3. Adjustment of Turnover Frequency

Turnover frequency is adjusted by selecting C10 and C11 as shown in Fig. 3-a, using the TURNOVER switch. By changing the values of C10 and C11, the time constants of the input circuit and the NFB are altered and the upper and lower limits of the low frequency curves are adjusted.
In the case of the high frequency, by changing C12, as shown in Fig. 4-a, the upper and lower limits of the high frequency are also controlled.

FILTER CIRCUIT (Q10, Q11)

The circuit shown in Fig. 5 has a steep characteristic of 12dB/oct, and is effective in removing noise. The low cutout filter can be switched to the three positions of 15Hz, OFF and 30Hz. Change-over of this cut-off frequency is achieved by changing over C1 and C2. The high cutout filter can be switched to the three positions of 12kHz, OFF and 8kHz, and this is achieved by the change-over of C3 and C4.

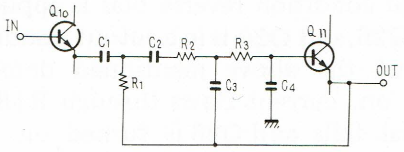

Circuit Diagram of Filter Amplifier

Fig. 5

POWER AMPLIFIER (Q12 – Q21)

The power amplifier of the SA-9500, is a direct-coupled, pure complementary parallel push pull circuit, which uses a differential amplifier stage and a constant current circuit, consisting of 10 transistors.

The power amplifier circuit is shown in Fig. 6.

Q12 and Q13, in the first stage, form a differential amplifier to stabilize the output mid-point potential and amplify the input signal. As the potential on the base of Q12 becomes the standard potential, the bias stabilization circuit is provided by D1, R5, R6, R7 and VR1, to be used in the base circuit of Q12. D1 is used to compensate for temperature, while VR1 is used to adjust the output junction point potential. The signal amplified by the differential amplifier is fed to Q14. The load of Q14 becomes a constant current circuit by Q15.

By using the constant current circuit for the load of Q14, the collector current of Q14 can be designed to be small to improve noise characteristics. Moreover, the AC load becomes extremely large. Accordingly, a large gain is obtainable. The output of Q14 drives the output circuit after Q16 and Q17. The NFB is applied to the base of Q13 by R11, R12, R13 and C4. The entire DC is also applied to the base of Q13 through R11, R12 and R13. Thus, stabilization of the output potential is secured. The AC NFB is determined by the split circuit of R12 and R11 to improve the characteristics.

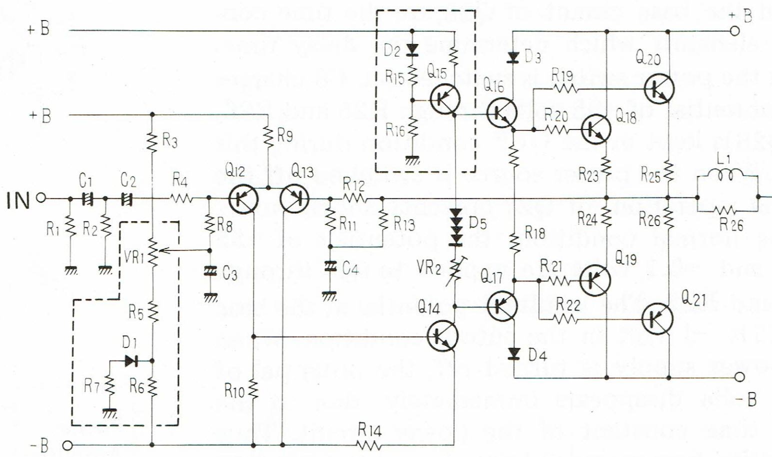

Circuit Diagram of Power Amplifier

Fig. 6

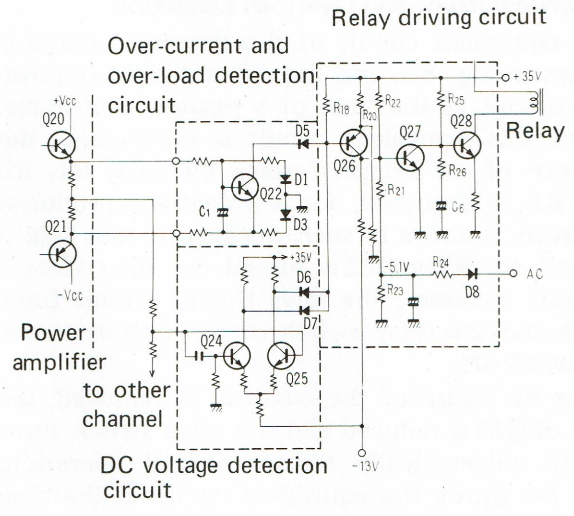

Circuit Diagram of Protection Circuit

Fig. 7

PROTECTION CIRCUIT (Q22 – Q27)

This protection circuit functions to protect the speakers from damage due to short-circuit of the load, etc, and performs a muting operation to cut noise and distortion which occur when switching the power on and off. The circuit is shown in Fig. 7, and consists of a bridge type over-current and overload detector, a differential amplifier DC voltage detector, and a power switch ON/OFF detector section.

1. Relay Driving Circuit

Q26 — Q28, in Fig. 7, comprise the relay driving circuit.

In the normal condition reverse bias is applied to the base of Q26, and Q26 is in a cutout condition. When one of the above mentioned detection circuits goes on, current flows through R18, the base potential falls and Q26 is turned on. Consequently Q27 comes on and Q28 goes off. When Q28 goes off, the current of the relay circuit is cut, to release the switch of the output circuit.

When the power switch is turned on, a delay operation occurs in this circuit. R25, R26 and C6, in the base circuit of Q28, are the time constant elements which determine the delay time. When the power switch is switched on, C6 charges to a potential of +35 volts through R25 and R26, and Q28 is kept in the OFF condition during this time. When the power source is switched off the muting operation of Q27 prevents shock noise. In the normal condition, the potentials of +35 volts and −5.1 volts are applied to Q27 through R21 and R22. The resultant potential at the base of Q27 is −1 volt in the cutout condition. When the power supply is turned off, the potential of −5.1 volts disappears immediately, due to the small time constant of the power circuit. Thus a positive base potential remains, switching Q27 on, which in turn switches off Q28 and hence the relay.

2. Over-current and Overload Detection

The equivalent circuit of this detector section is shown in Fig. 8-a, and Fig. 8-b shows the equivalent circuit at the time of a positive half cycle. When this equivalent circuit is overloaded, the balance of the bridge, formed by RE1, R1, R5 and RL, is disturbed, and a potential is produced between b and a in such a direction that Q22 is turned on. When Q22 is turned on, the collector current increases, the relay driving circuit functions and the relay switch of the output circuit is turned off.

After the cause of the overload is removed, the bias of Q22 is reduced and the relay switch turns on to automatically restore normal operation, Fig. 8-c shows the equivalent circuit at the time of a negative half cycle. In this circuit a potential is produced between b and e as above, and Q22 is turned on.

3. Detection of DC Voltage

This is a differential amplifier consisting of Q24 and Q25, as shown in Fig. 9. The bases of Q24 and Q25 are connected to the junction-points of

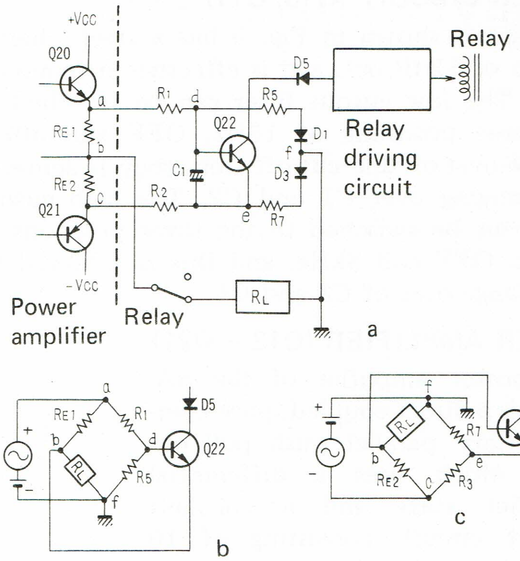

Fig. 8

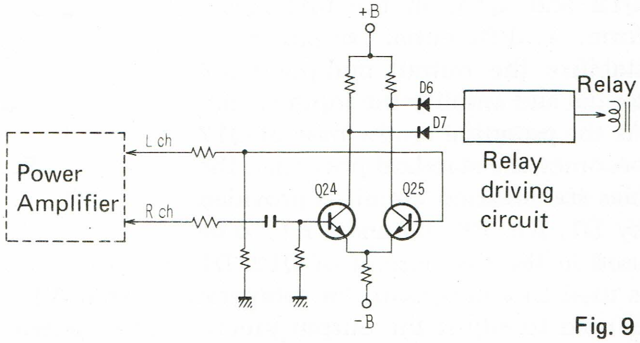

Fig. 9

the right and the left power amplifiers. When the DC balance of the power stage is lost for some reason, a potential difference is produced in the input signal to the differential amplifier, and the collector currents of Q24 and Q25 are put out of balance. Thus, the relay driving circuit functions, and the relay switch is turned off.

POWER SUPPLY CIRCUIT (Q28 — Q34)

The SA-9500 uses a balanced power supply with a built-in constant potential circuit. Apart from the stage of the pre-driver, all other parts are in constant potential condition. Therefore, not only is operating stability superior, but it is useful in reducing the remaining noise.

The power source, after the pre-driver stage of the amplifier circuit, is provided by the bridge rectifier circuit and the 18,000μF capacitor.

6. LEVEL DIAGRAM

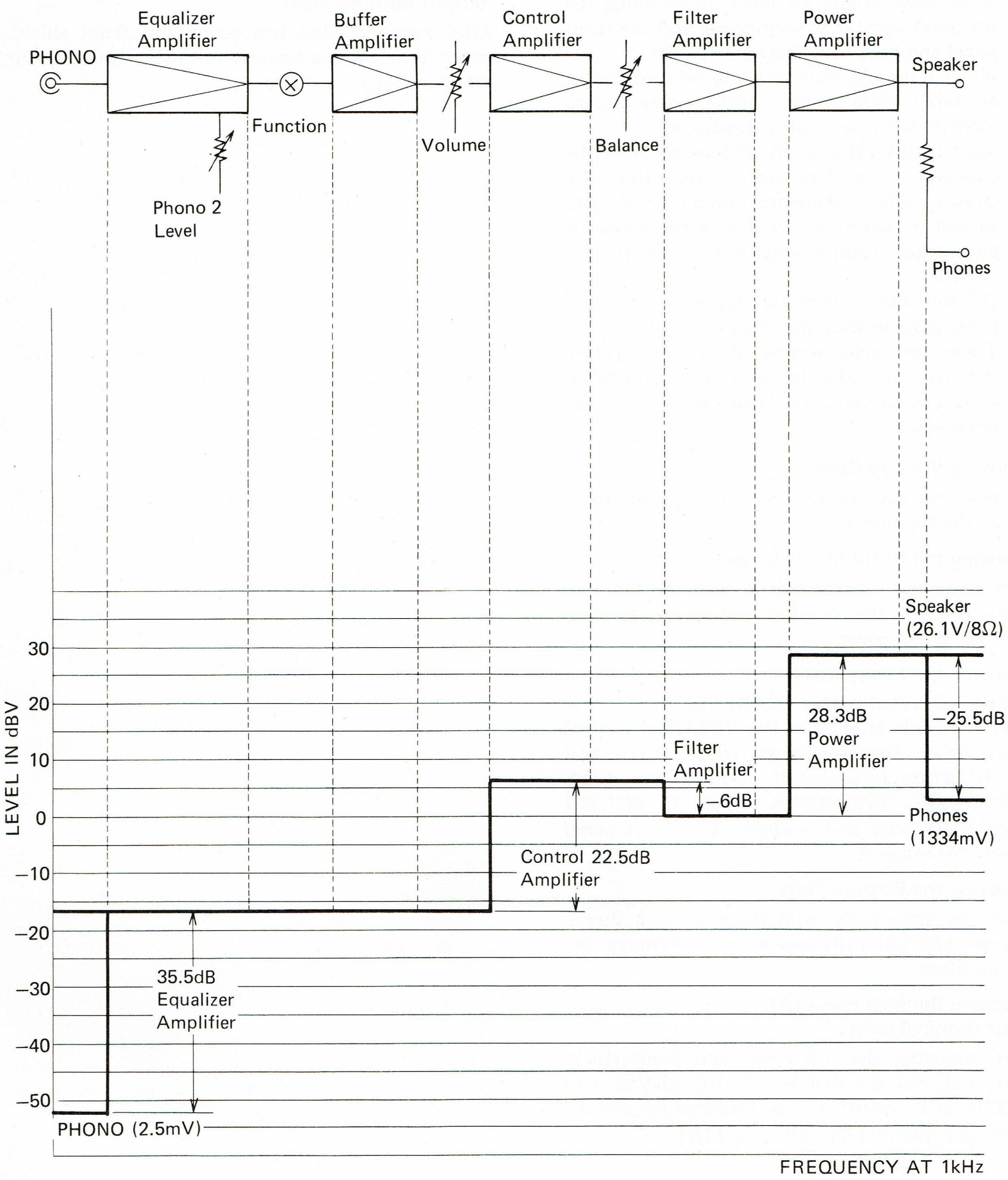

7. DISASSEMBLY

Disassembly Cautions

(1) Great care should be taken in handling the SA-9500 since it is very heavy and the front panel and heat sink fins are exposed.

(2) When replacing components, be sure to disassemble them in the correct order and to identify the disassembly positions.

(3) Most of the printed circuit boards cannot be checked unless they are removed from the chassis. When removing them, great care should be taken not to touch them against any other components nor to short any circuit.

(4) Do not exert excessive force on the side panel stays as they may be bent.

(5) There are many screws of different types. It is recommended therefore that you make a note of the positions from which they are removed.

Removing the Top Cover

Unscrew the six screws (A) on the top cover. Lift up the top cover.

Removing the Front Shield Cover

After removing the top cover, unscrew the two screws (B) on the front shield cover. Lift up the front shield cover.

Removing the Front Panel

Remove all front panel knobs (C) except the POWER switch knob. For the VOLUME control knob, loosen the set screws with a hexagonal wrench before removing it. Remove the BASS TURNOVER, SPEAKERS, and FUNCTION switch shaft nuts and washers. The front panel is ready for removal.

Removing the Bottom Plate

Stand the main body with the heat sink down. Unscrew the ten (10) screws (D). Remove the bottom plate.

Removing the Side Panel (R) (input terminal side)

After removing the top cover and front shield cover, pull out the PHONO 2/MIC LEVEL and IMPEDANCE control knobs. Unscrew the sixteen screws (E). Remove the side panel (R).

Removing the Side Panel (L) (output terminal side)

After removing the top cover and front shield cover, unscrew the seven screws (F). Remove the side panel (L).

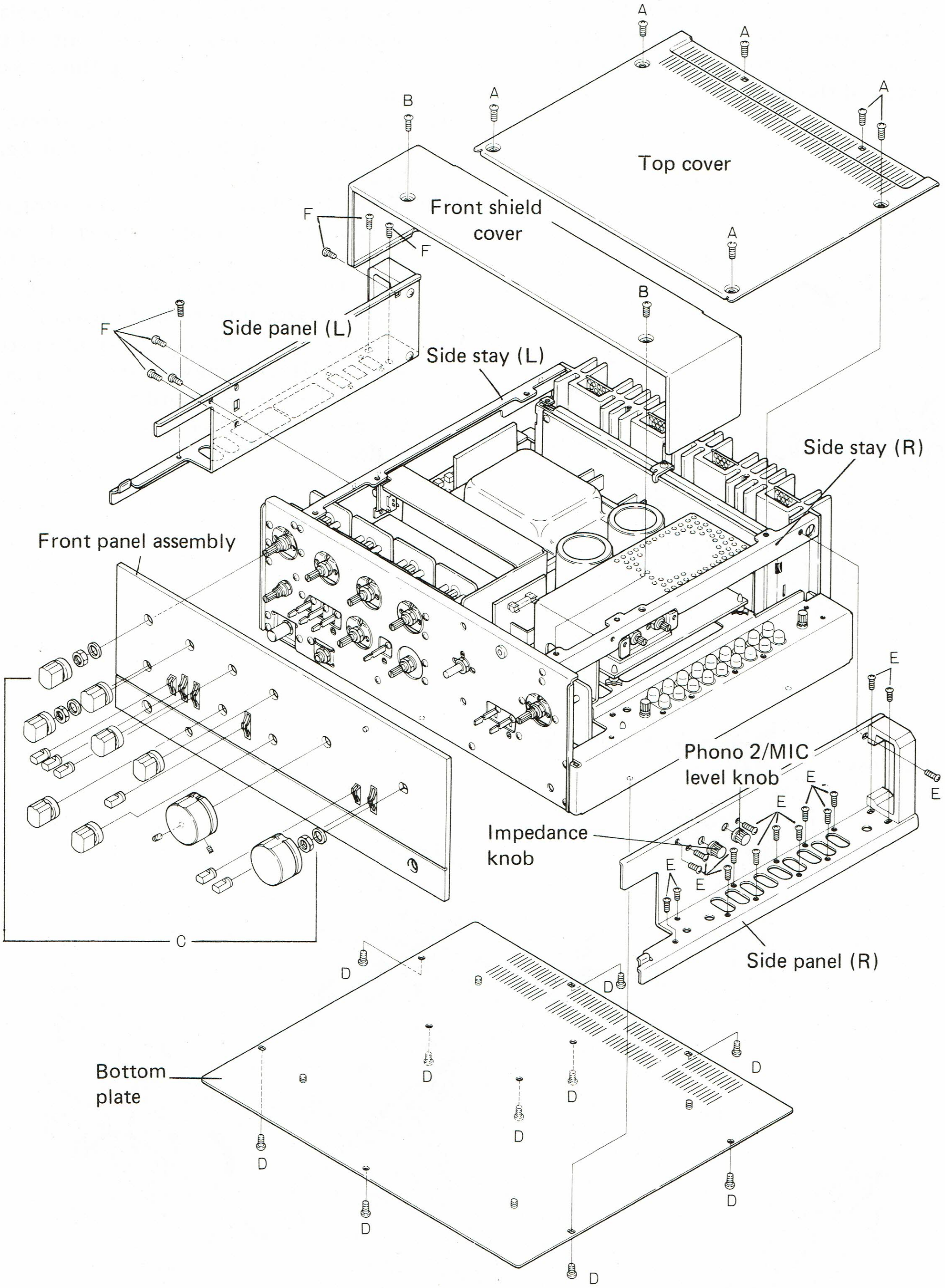
A
A
A
B
A
Top cover
Front shield
cover
F
F
A
B
F
Side panel (L)
Side stay (L)
Side stay (R)
Front panel assembly
E
Phono 2/MIC
level knob
E
E
E
Impedance
knob
E
E
Side panel (R)
C
D
D
D
D
D
D
D
D
D
D
Bottom
plate

Removing the Protection Circuit Assembly (Fig. 10)

(1) Remove the top cover, front shield cover, bottom plate, and left side panel.

(2) Unscrew the two screws (A) mounting the printed circuit board fixing brackets on the chassis. This permits the printed circuit board to be inclined to an angle depending on the length of the lead wires.

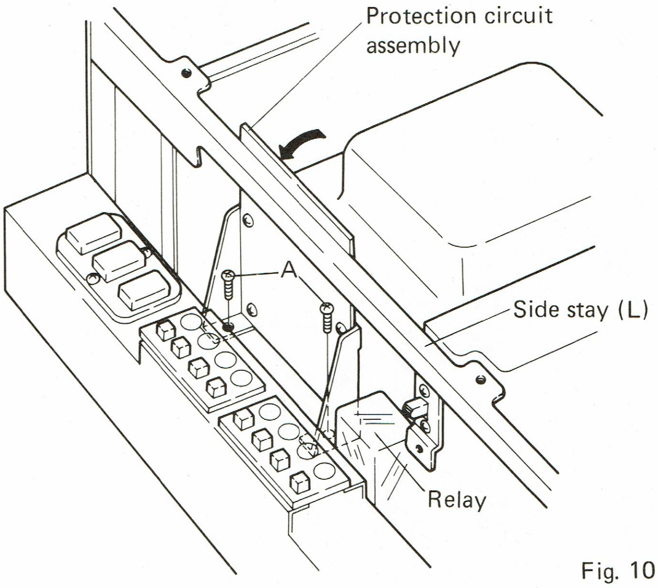

Fig. 10

Removing the Power Amplifier Assembly (Fig. 11)

(1) After the top cover and bottom plate have been removed, the power amplifier can be adjusted.

(2) The power transistors can be replaced by pulling the transistor covers out of the heat sink guides and unscrewing their two screws (B).

(3) Unscrew the varistor fixing screw at the upper part of the center of the heat sink. Remove the varistor.

(4) Stand the main body on the bottom plate so it is not touching the bench. Unscrew the eight screws (C) at both sides of the heat sink. This allows the power amplifier printed circuit board to be turned forward.

(5) Unscrew the four printed circuit board fixing screws (D) and screws Ⓐ and Ⓑ. This allows the printed circuit board to be removed from the heat sink. After this has been done amplifier can be checked.

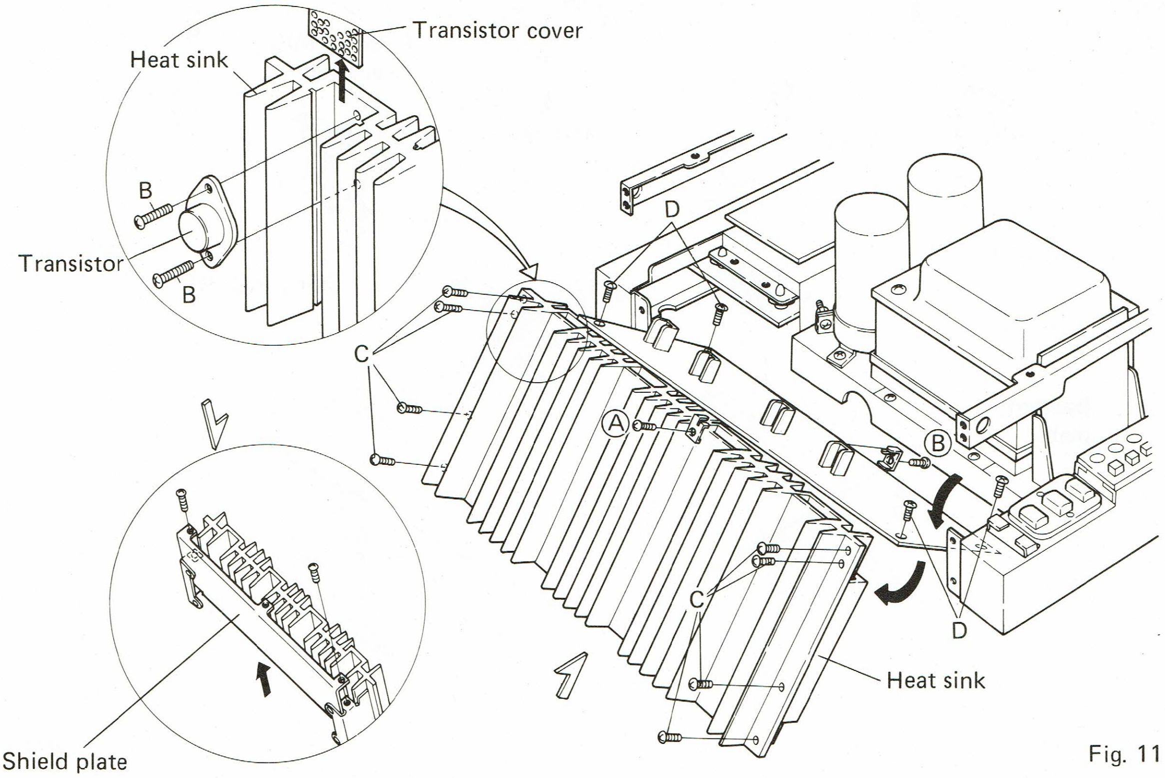

Fig. 11

Removing the Power Supply Circuit Assembly-1 (Fig. 12)

(1) Remove the top cover, front shield cover, and bottom plate. This allows the 1A protection fuse (FU_4) in the pilot lamp system to be replaced.

(2) Unscrew the two screws (E) which mount the printed circuit board on the chassis. This allows the printed circuit board to be moved, though the distance is limited by the length of its lead wire.

Removing the Power Supply Circuit Assembly-2 (Fig. 12)

(1) Remove the top cover, front shield cover, and right side panel.

(2) Unscrew the four screws (F) which mount the shield case on the chassis.

(3) Be careful not to touch the volume assembly against any other part.

(4) Pull up the power supply circuit assembly-2 from the bosses.

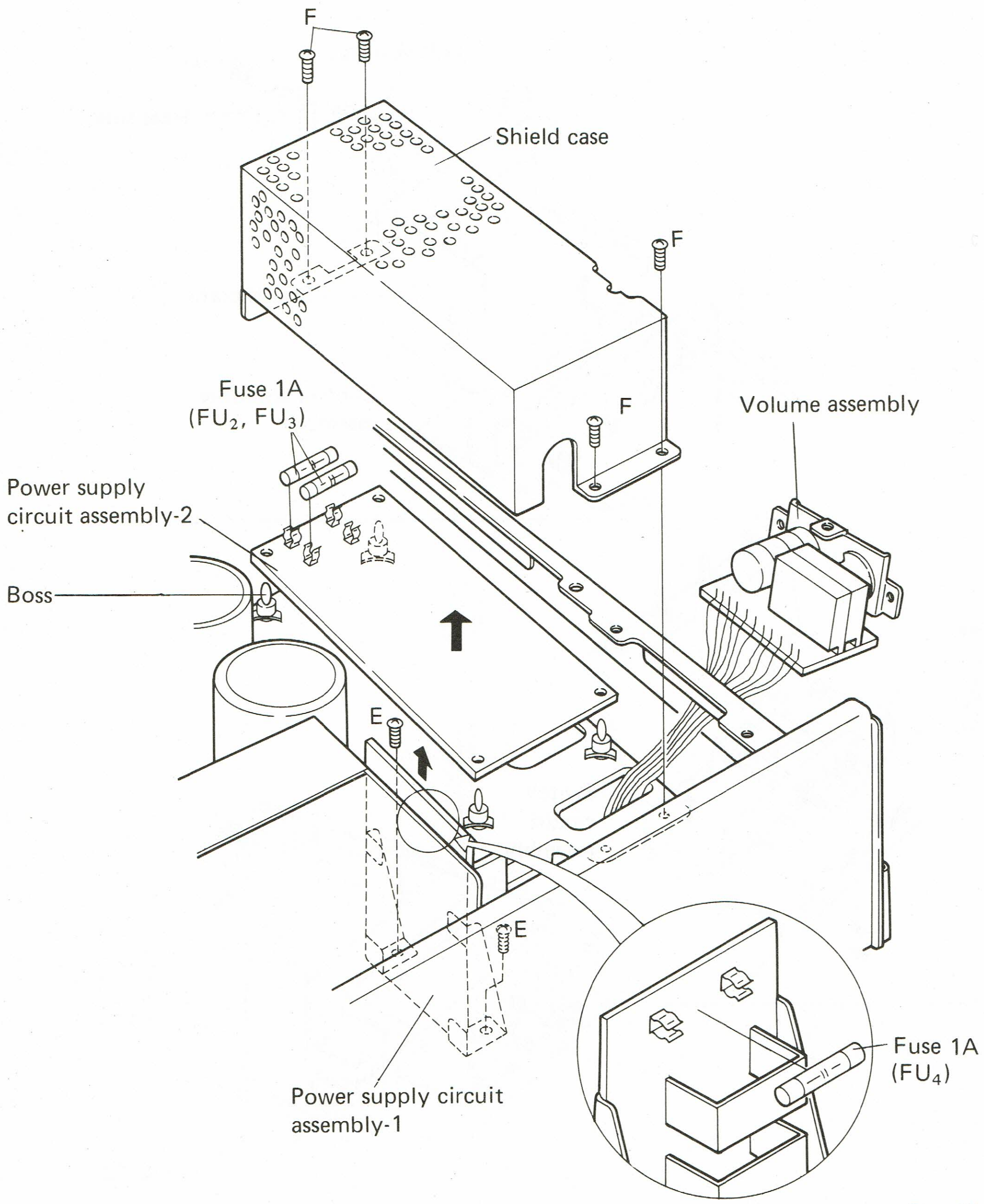

Fig. 12

Removing the Control Amplifier Assembly, Switch Circuit Assembly (Fig. 13)

(1) Remove the top cover, front shield cover, front panel, and left side panel.

(2) Unscrew the three screws (G) which mount the control amplifier assembly shield plate on the chassis. Pull up the shield plate.

(3) Unscrew the heat sink top screws (H) and two panel stay screws (I). Remove the left side stay.

(4) Unscrew the five screws (J) of the panel stay. Remove the control amplifier assembly by moving it forward.

(5) Unscrew the twenty-seven screws of the panel stay and PHONES jack, SPEAKERS selector switch shaft and VOLUME control shaft nuts and washers. Remove the switch circuit assembly by inclining the panel stay.

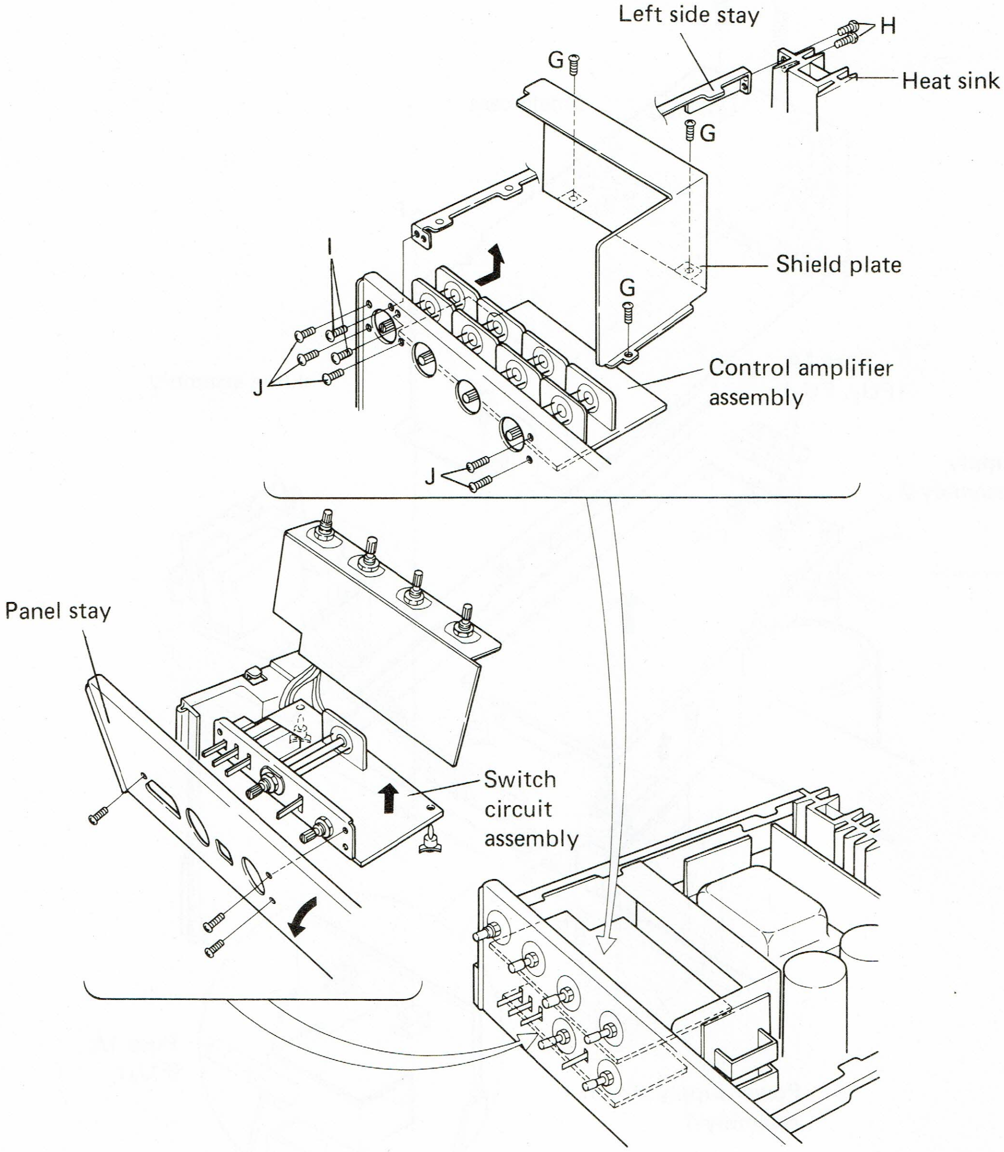

Fig. 13

Removing the Input Circuit Assembly (Fig. 14)

The PHONO jacks, TAPE MONITOR and DUPLICATE lever switches, and FUNCTION rotary switch are installed on the input circuit assembly printed circuit board.

(1) Remove the top cover, front shield cover, front panel, bottom plate, and right side panel.
(2) Remove the shield case and power supply circuit assembly-2.
(3) Unscrew the twenty-seven screws of the panel stay and PHONES jack and SPEAKERS selector switch shaft and VOLUME control shaft nuts and washers. Incline the panel stay.
(4) Pull out the input circuit assembly from the bosses.

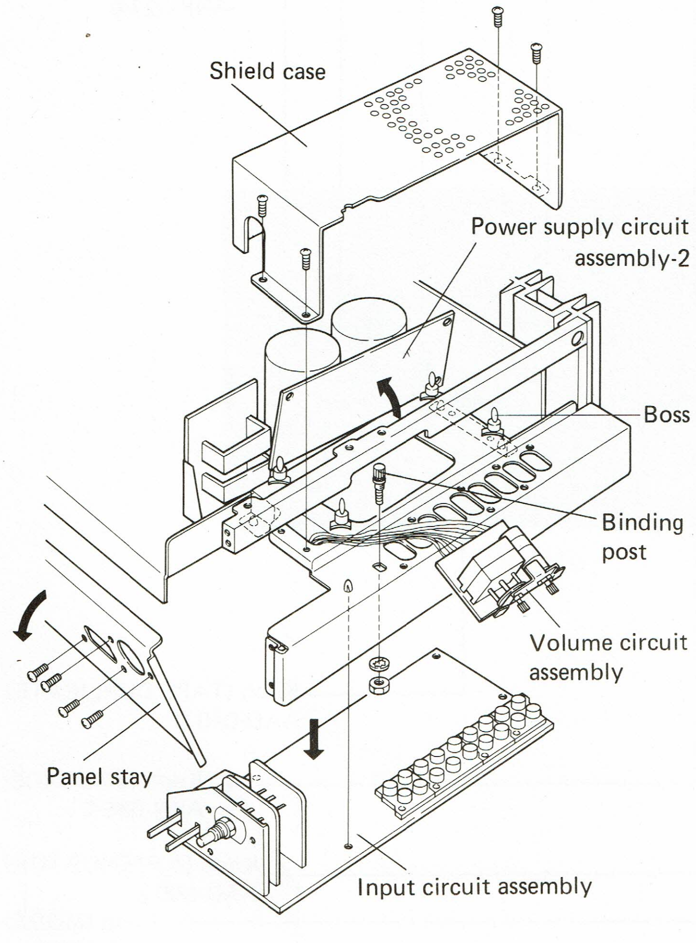

Fig. 14

Removing the Fuse Assembly (Fig. 15)

(1) Remove the bottom plate.
(2) Pull out the Fuse assembly from the bosses.

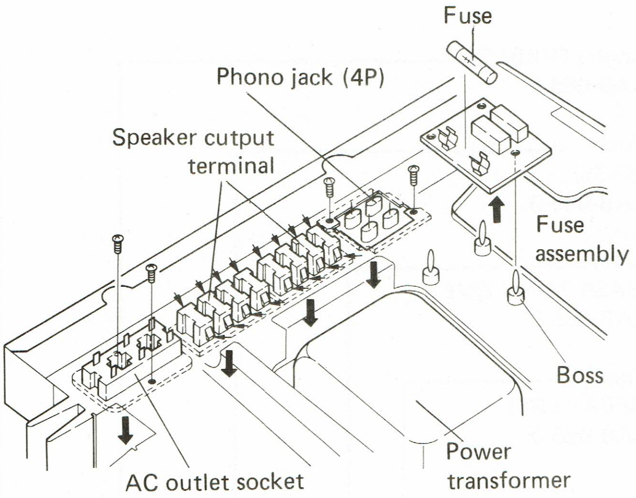

Fig. 15

8. PARTS LOCATIONS

FRONT PANEL VIEW

Knob (TREBLE)
AAB-086-0

Knob
(BASS)
AAB-086-0

Knob
(BASS TURN OVER)
AAB-086-0

Knob
(SPEAKERS)
AAB-086-0

Knob (TREBLE TURN OVER)
AAB-086-0

Knob (VOLUME)
AAB-089-A

Knob (TAPE MONITOR)
AAD-040-B

Knob (FUNCTION)
AAB-084-0

Front panel assembly
ANB-327-0

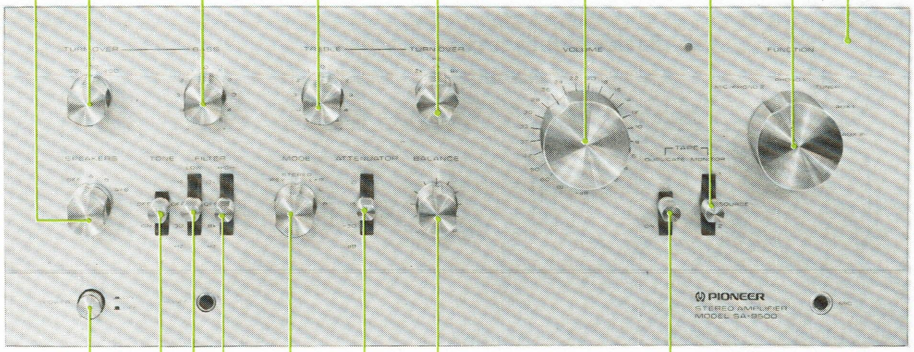

Knob
(POWER)
AAD-086-0

Knob (TONE)
AAD-040-B

Knob (LOW FILTER)
AAD-040-B

Knob (HIGH FILTER)
AAD-040-B

Knob (TAPE DUPLICATE)
AAD-040-B

Knob (BALANCE)
AAB-086-0

Knob (ATTENUATOR)
AAD-040-B

Knob (MODE)
AAB-086-0

FRONT VIEW WITH PANEL REMOVED

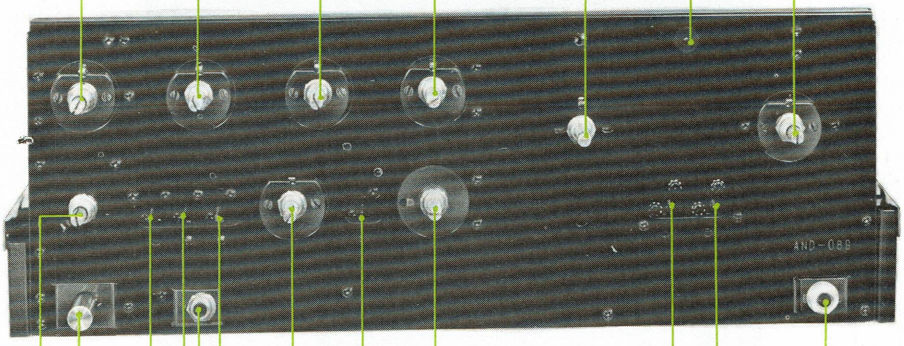

TOP VIEW
For "KCU, D" Types (120V model and 3-line voltage model)

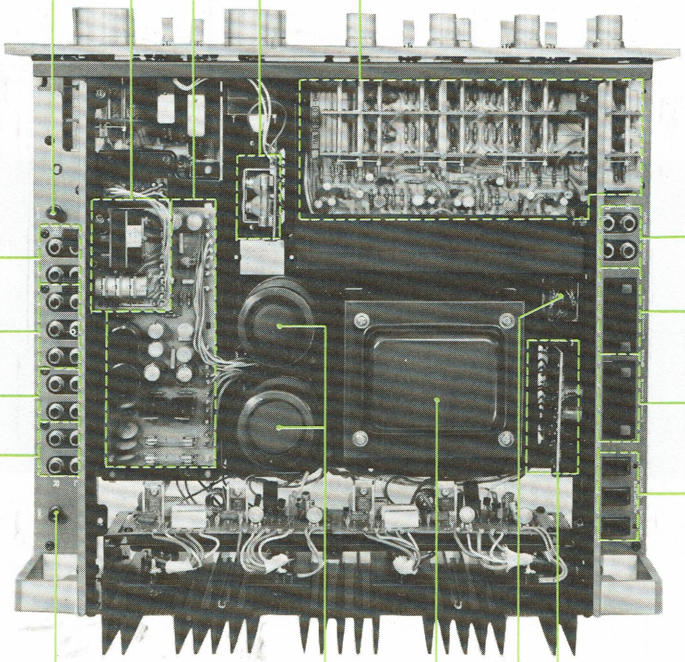

For "GN" Type (220V model)

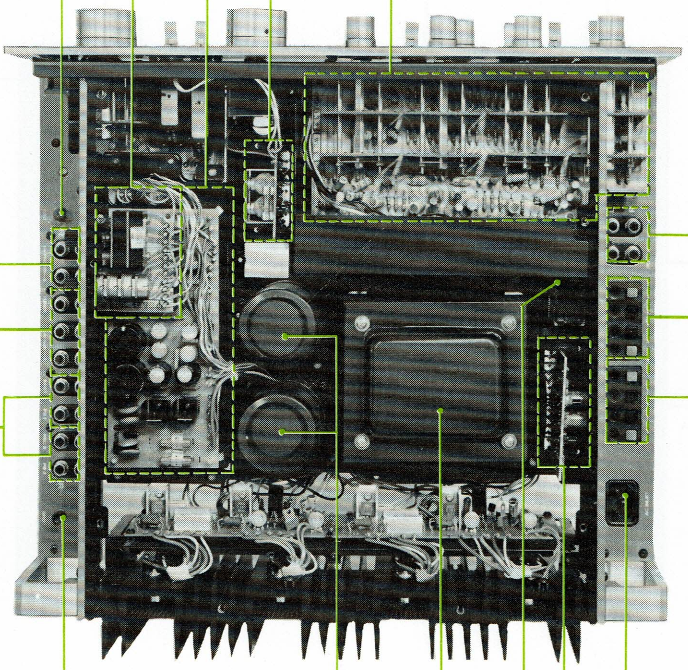

BOTTOM VIEW
For "KCU, D" Type (120V model and 3-line voltage model)

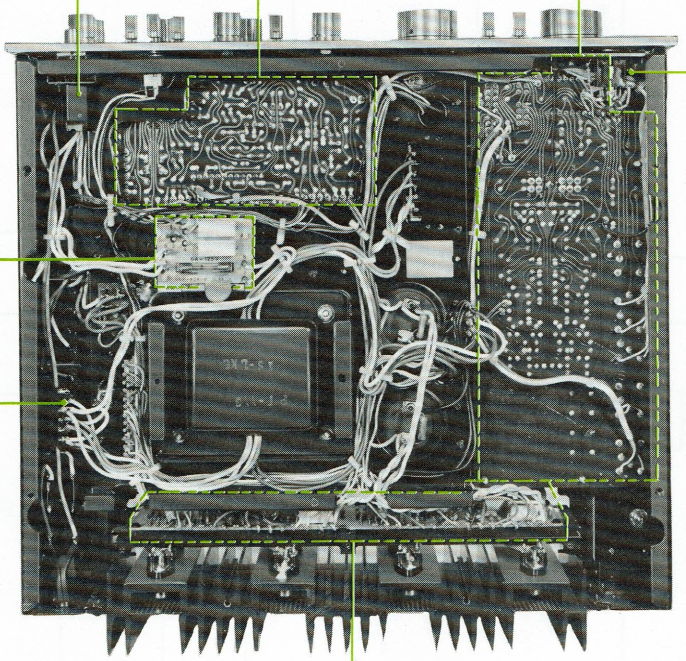

For "GN" Type (220V model)

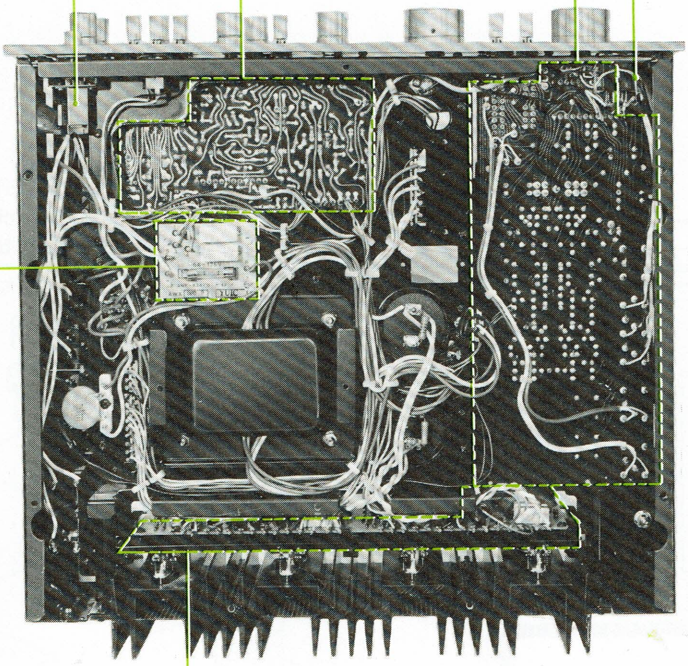

9. ADJUSTING PROCEDURES

Set-up

(a) Remove the top cover and bottom plate, and stand the main body with the heat sinks down.

(b) Before turning on the POWER switch, turn VR3 and VR4 all the way to the left (counterclockwise).

(c) For adjustment, wait 10 minutes after the POWER switch is turned on.

Adjusting procedures

(1) Set the PRE/POWER AMP switch to the SEPARATED (lower) position.

(2) Fit 5.1kΩ resistors to the POWER IN terminals as shown in Fig. 16.

(3) Connect 8Ω dummy loads between the SPEAKER A terminals as shown in Fig. 16.

(4) Set the SPEAKERS switch to position A. Turn on the POWER switch.

(5) Connect a DC voltmeter (100mV/full scale) between pins 10 and 9. Adjust VR1 until the voltmeter indicates 0V.

(6) Connect the DC voltmeter between pins 25 and 24. Adjust VR2 until the voltmeter indicates 0V.

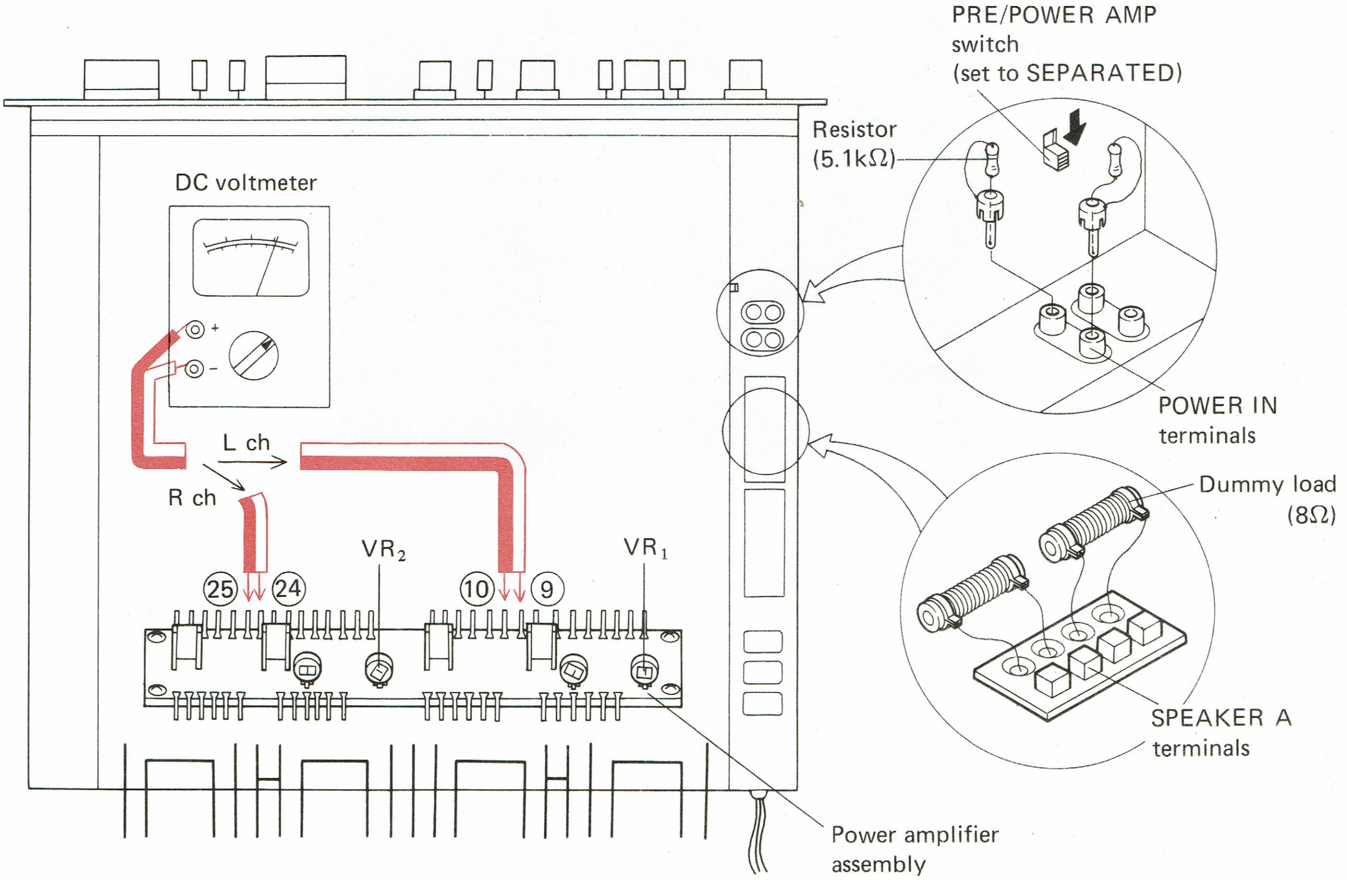

Fig. 16

(7) Connect the DC voltmeter between pins 12 and 13. Adjust VR3 until the voltmeter indicates 20mV.
(8) Connect the DC voltmeter between pins 27 and 28. Adjust VR4 until the voltmeter indicates 20mV.

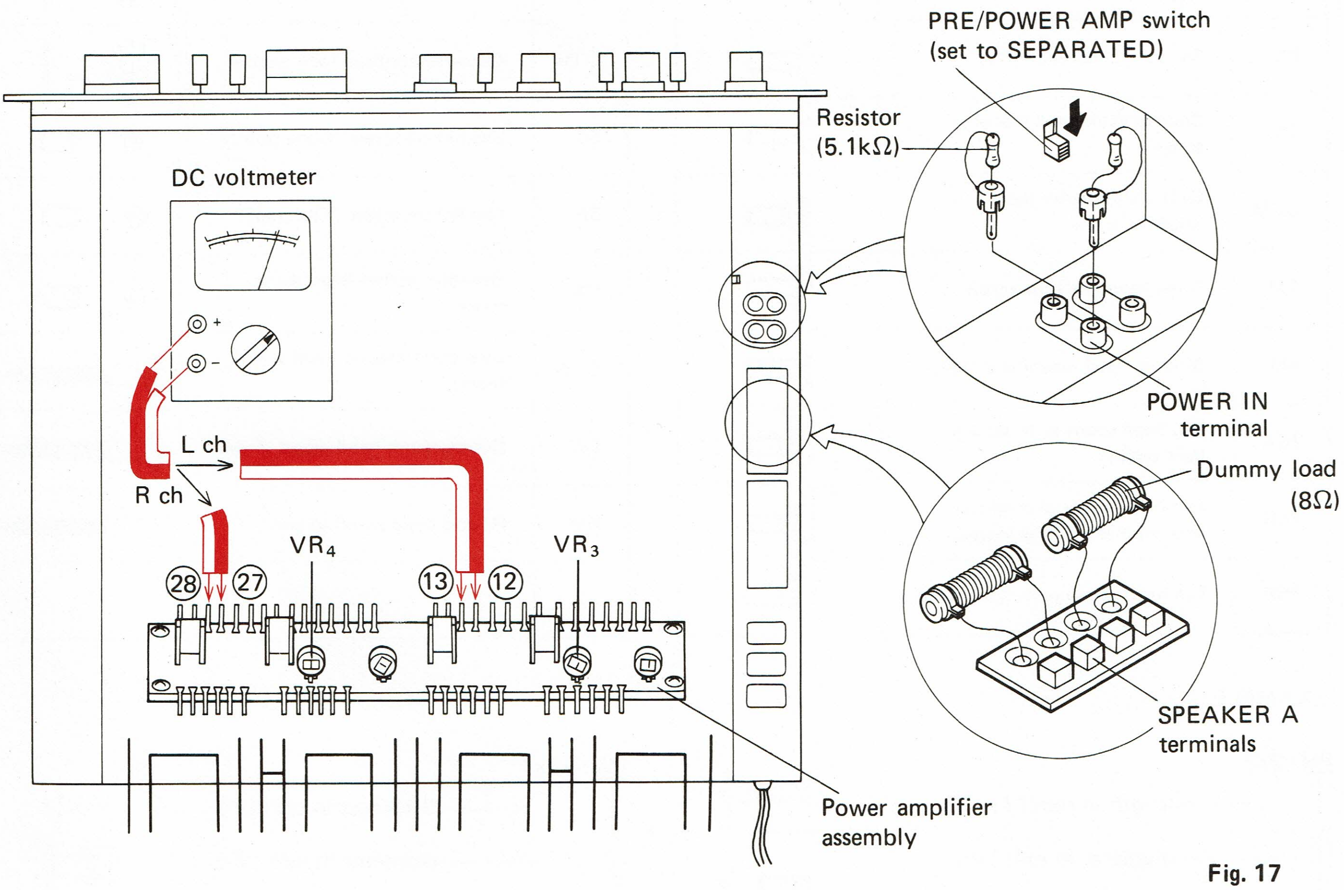

Fig. 17

10. EXPLODED VIEW

NOMENCLATURE OF SCREWS, WASHERS AND NUTS

The following symbols stand for screws, washers and nuts as shown in exploded view.

Symbol	Description	Shape
RT	Brazier head tapping screw	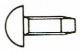
PT	Pan head tapping screw	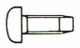
BT	Binding head tapping screw	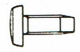
CT	Countersunk head tapping screw	
TT	Truss head tapping screw	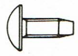
OCT	Oval countersunk head tapping screw	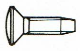
PM	Pan head machine screw	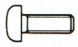
CM	Countersunk head machine screw	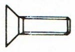
OCM	Oval countersunk head machine screw	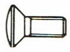
TM	Truss head machine screw	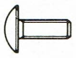
BM	Binding head machine screw	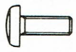
PSA	Pan head screw with spring lock washer	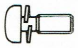
PSB	Pan head screw with spring lock washer and flat washer	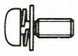
PSF	Pan head screw with flat washer	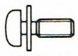

Symbol	Description	Shape
EW	E type washer	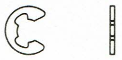
FW	Flat washer	
SW	Spring lock washer	
N	Nut	
WN	Washer faced nut	
ITW	Internal toothed lock washer	
OTW	Outernal toothed lock washer	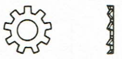
SC	Slotted set screw (Cone point)	
SF	Slotted set screw (Flat point)	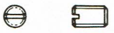
HS	Hexagon socket headless set screw	
OCW	Oval countersunk head wood screw	
CW	Countersunk head wood screw	
RW	Round head wood screw	

EXAMPLE

PM · 3x8

length in mm (l)

diameter in mm (d)

Symbol

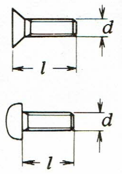

FW · 9ϕx1^t

thickness in mm (t)

diameter in mm (d)

Symbol

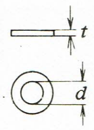

EXPLODED VIEW

NOTE:
Parts indicated in green type cannot be supplied.

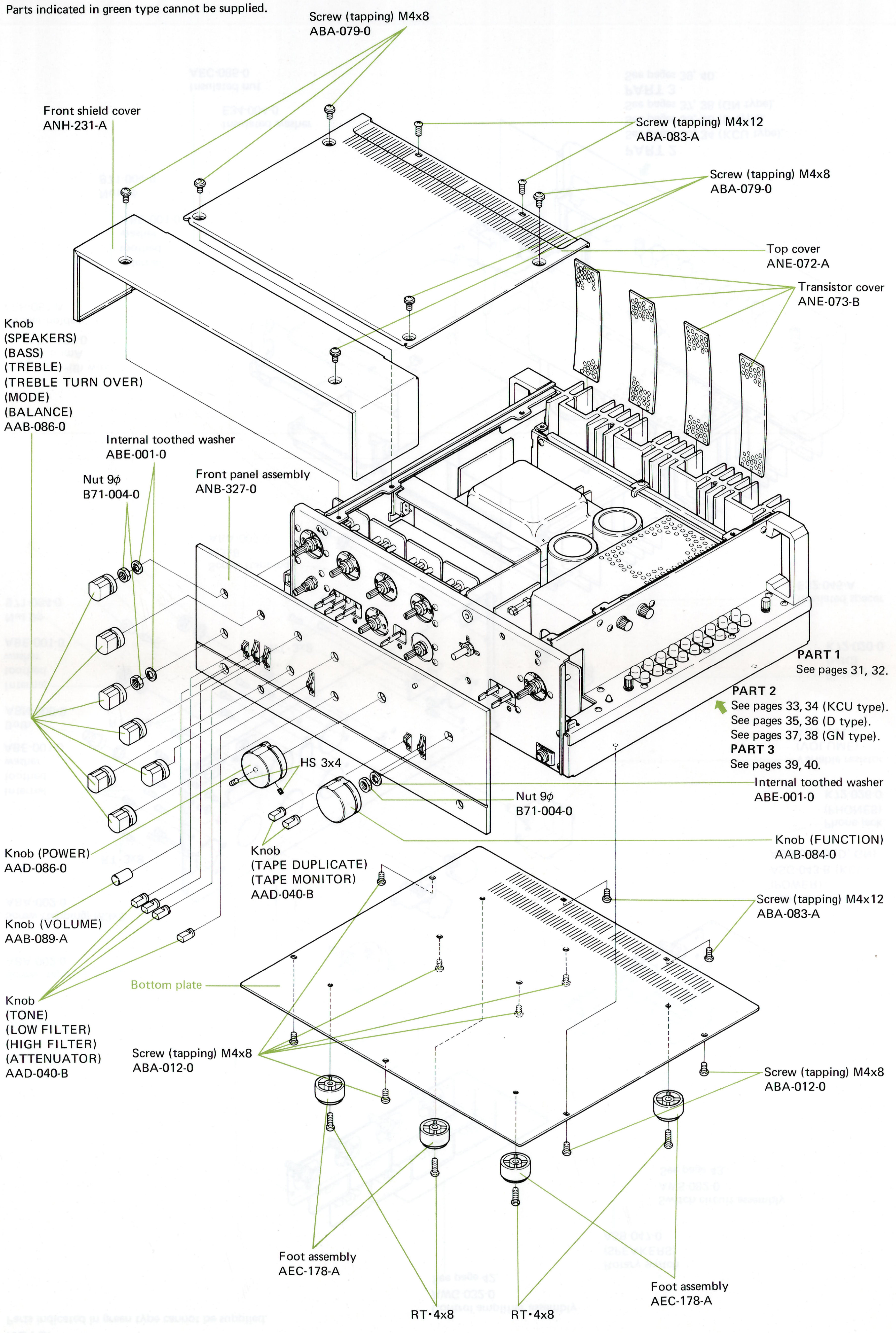

31

PART 1

NOTE:
Parts indicated in green type cannot be supplied.

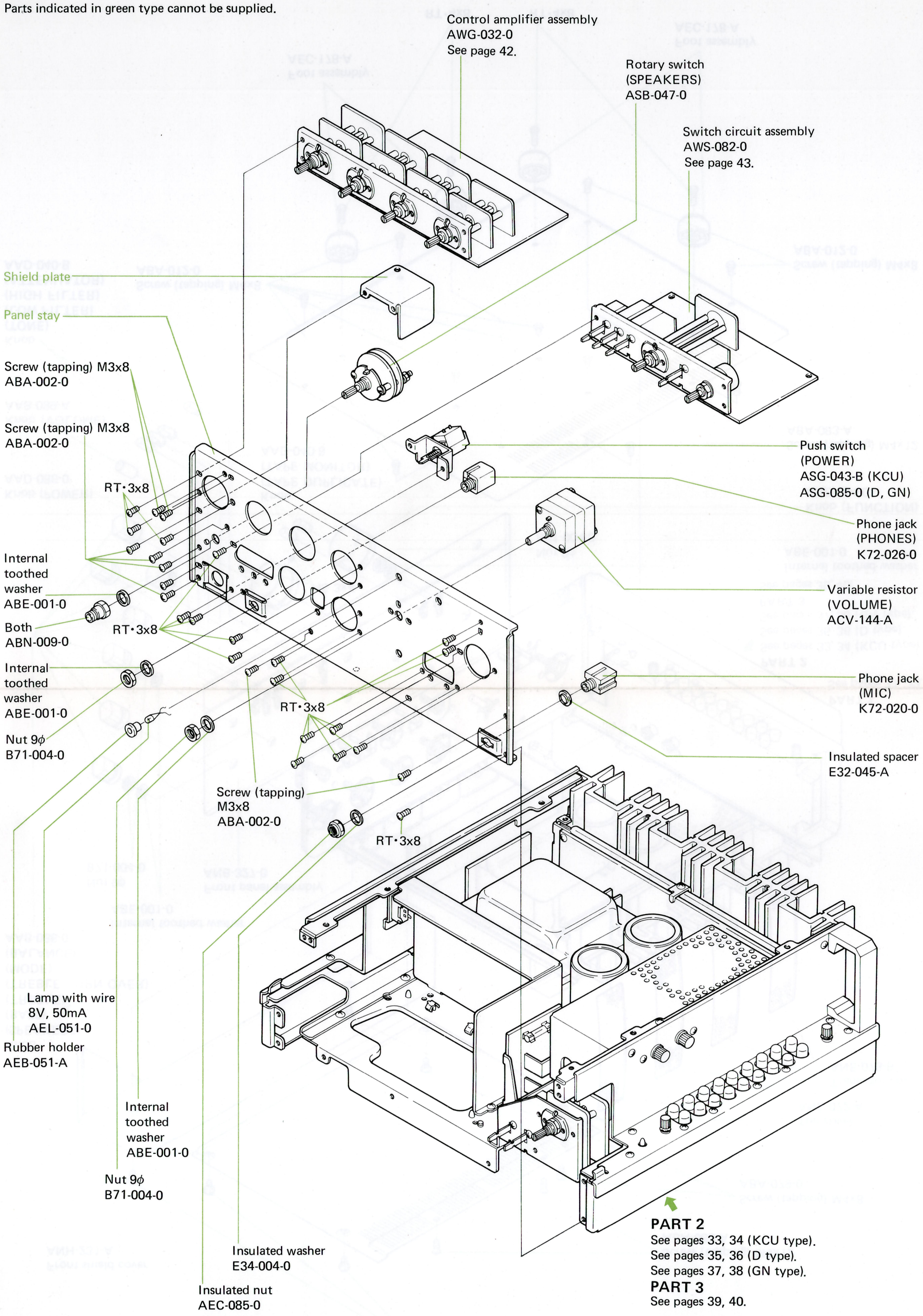

32

PART 2

For "KCU" Type (120V model)

NOTE:

Parts indicated in green type cannot be supplied.

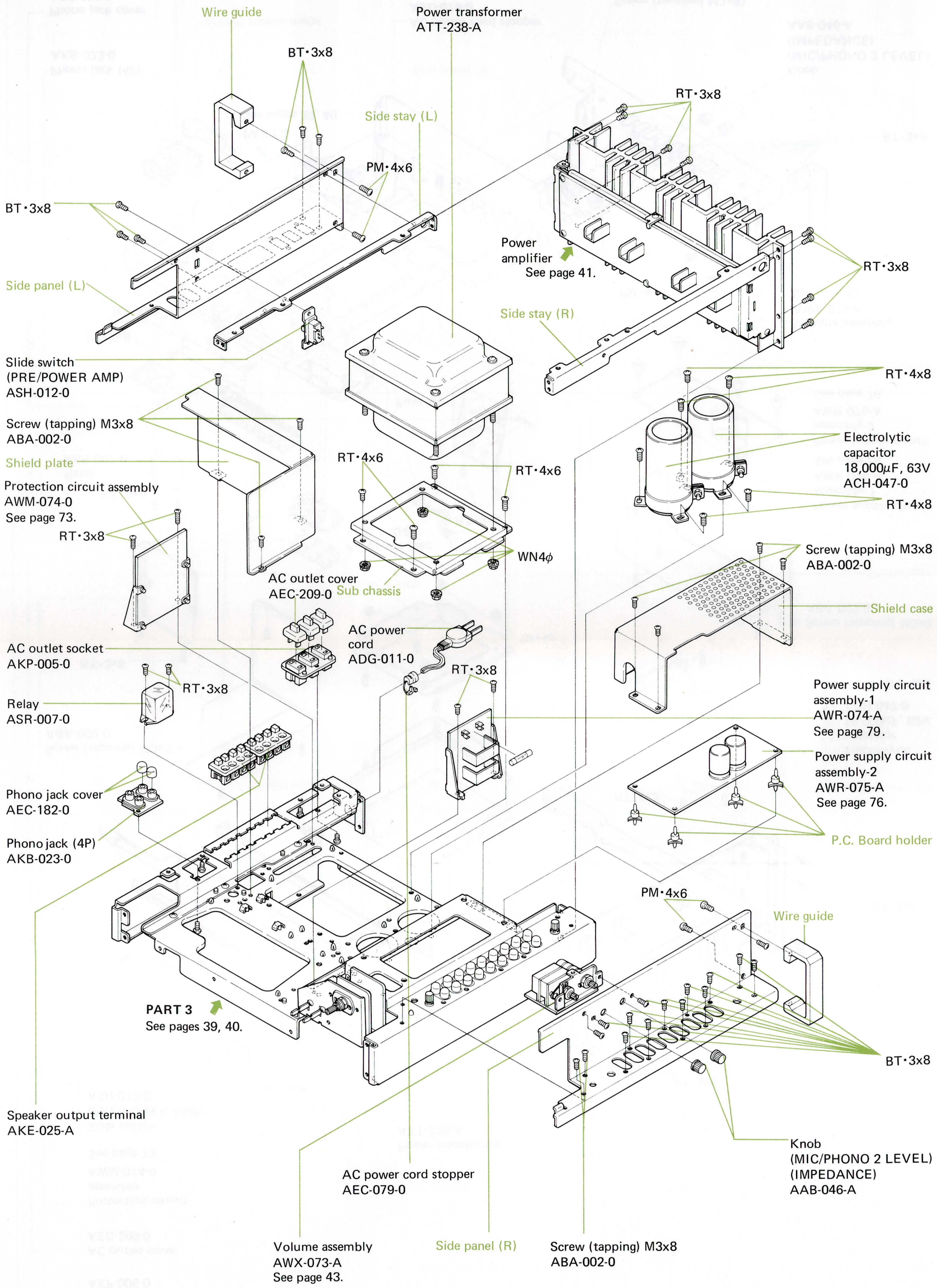

For "D" Type (3-line voltage model)

NOTE:
Parts indicated in green type cannot be supplied.

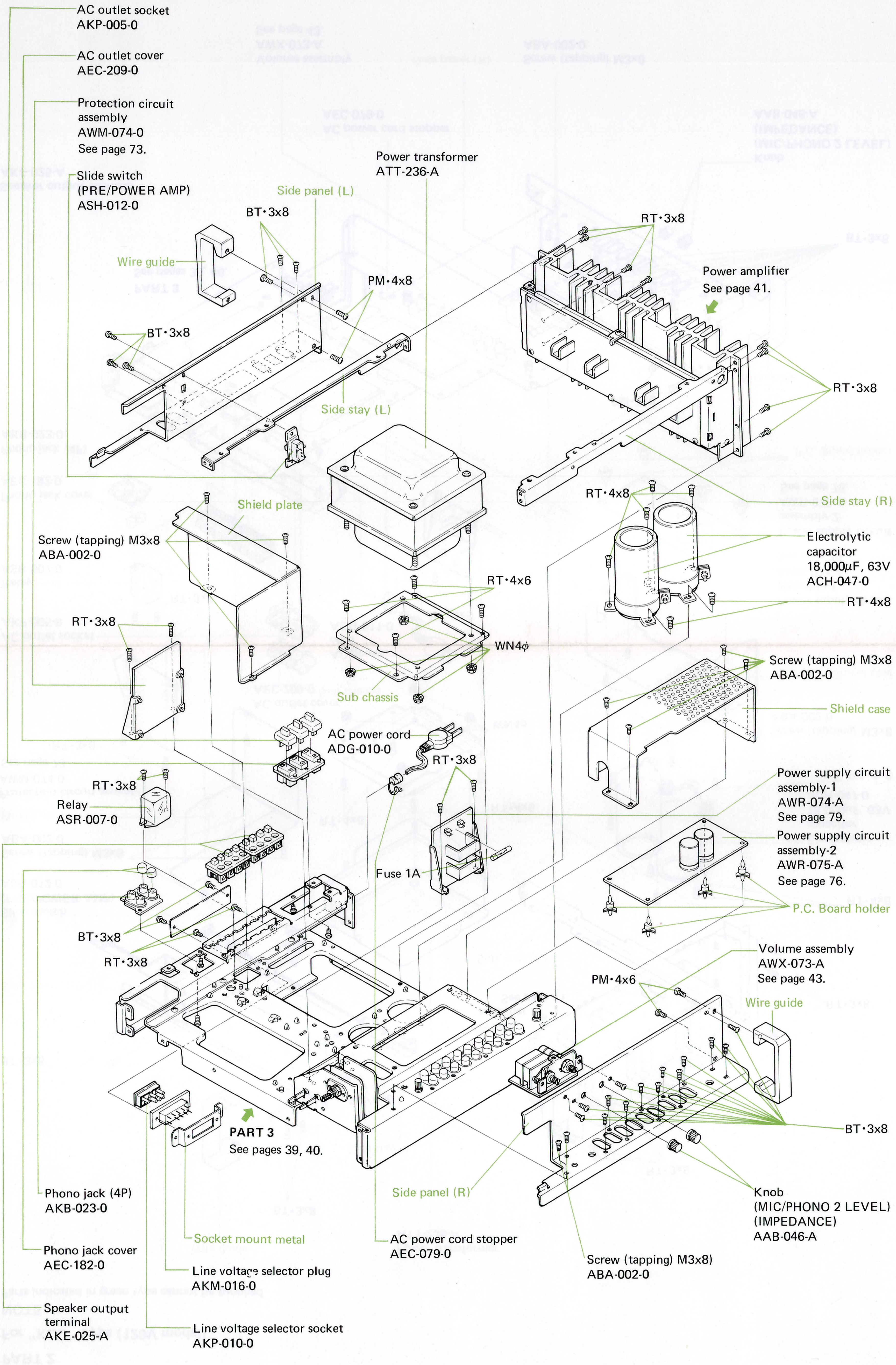

PART 2

For "GN" Type (220V model)

NOTE:
Parts indicated in green type cannot be supplied.

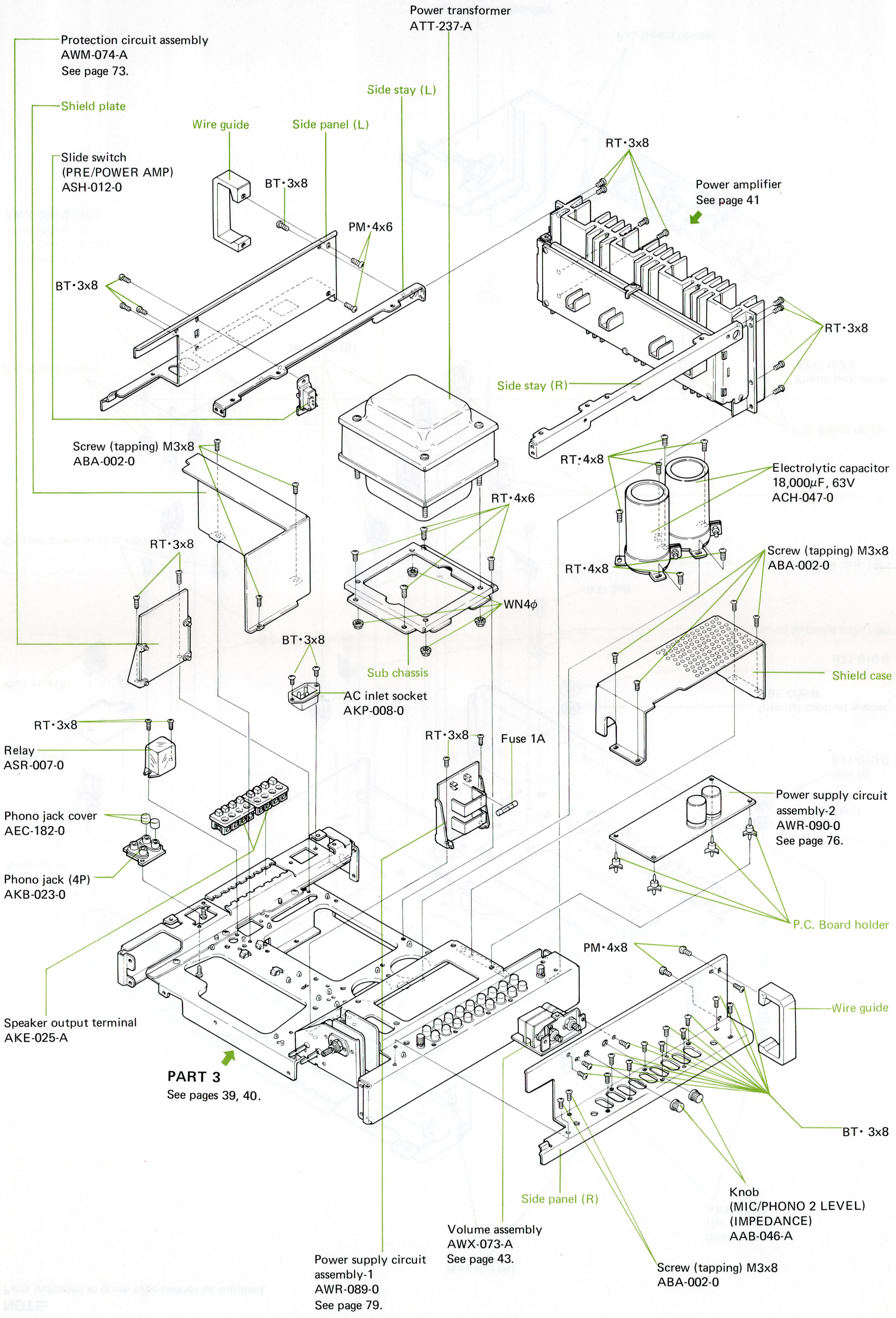

PART 3

NOTE:
Parts indicated in green type cannot be supplied.

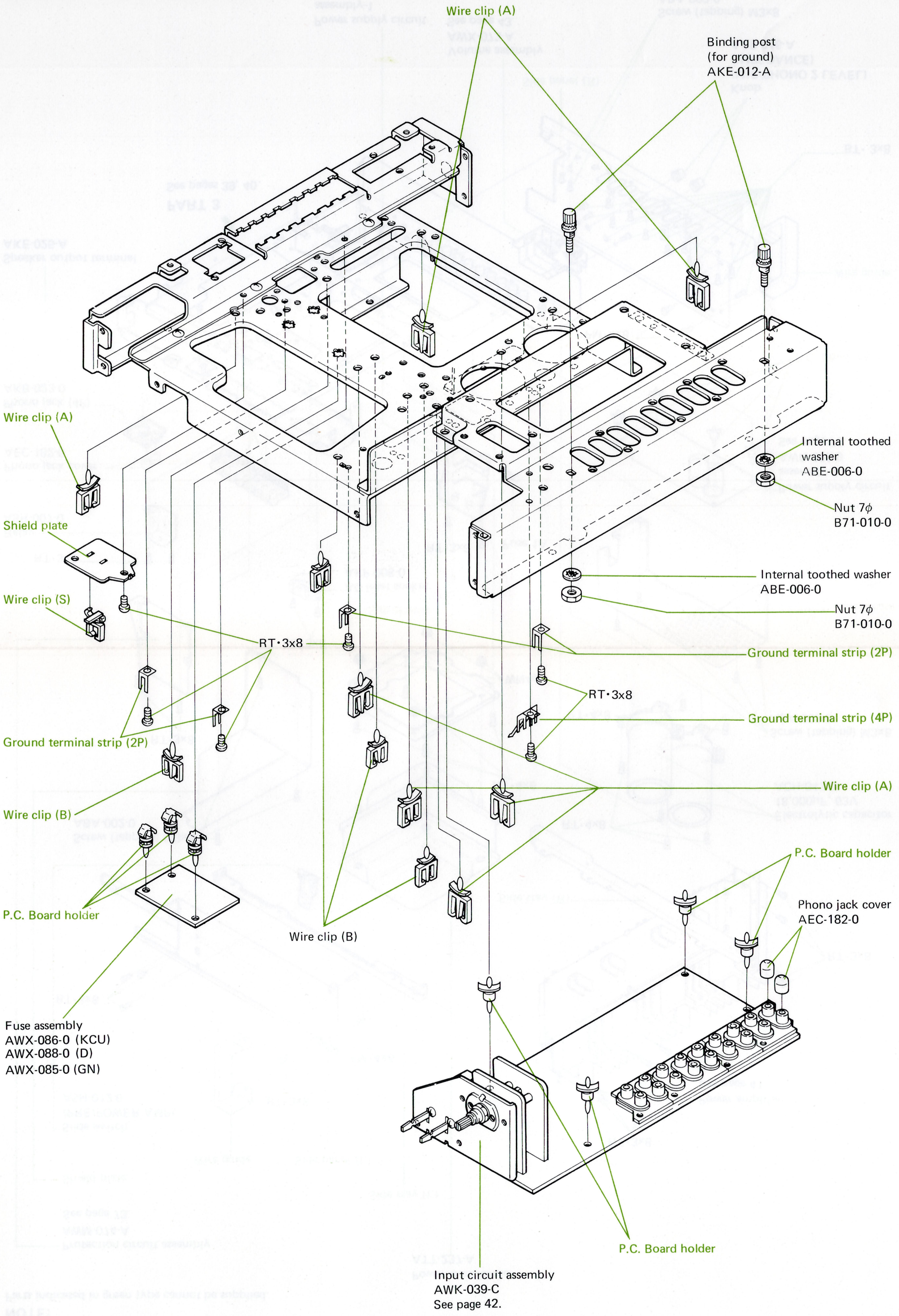

POWER AMPLIFIER

NOTE:
Parts indicated in green type cannot be supplied.

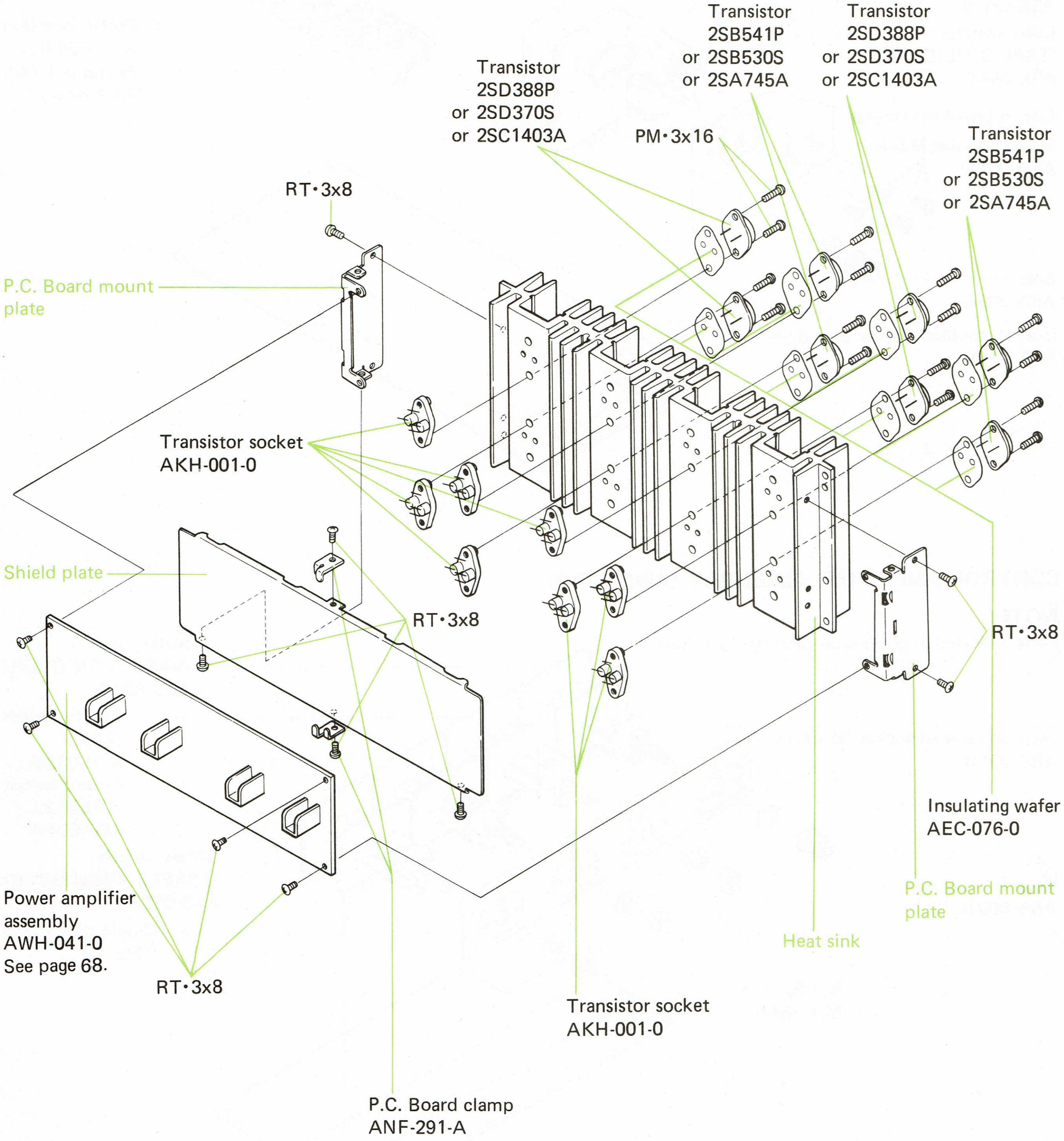

INPUT CIRCUIT ASSEMBLY (AWK-039-C)

NOTE:
Parts indicated in green type cannot be supplied.

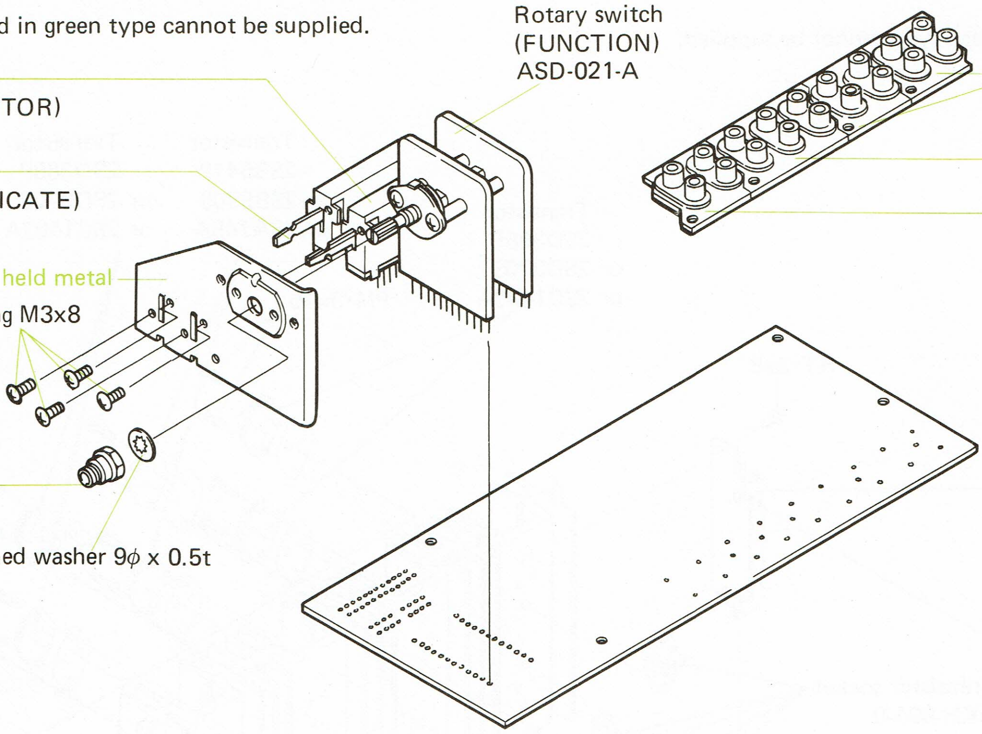

CONTROL AMPLIFIER ASSEMBLY (AWG-032-0)

NOTE:
Parts indicated in green type cannot be supplied.

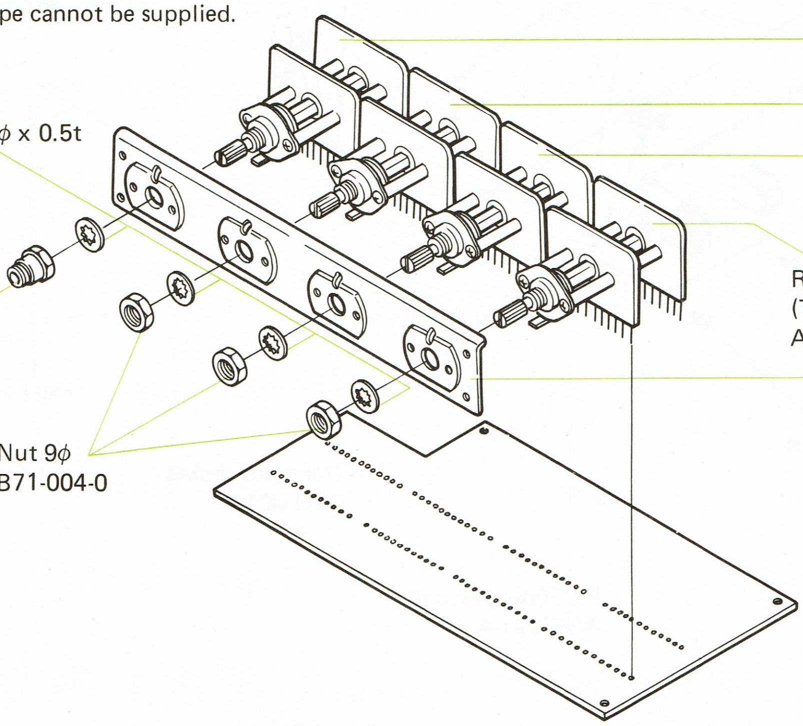

SWITCH CIRCUIT ASSEMBLY (AWS-082-0)

NOTE:
Parts indicated in green type cannot be supplied.

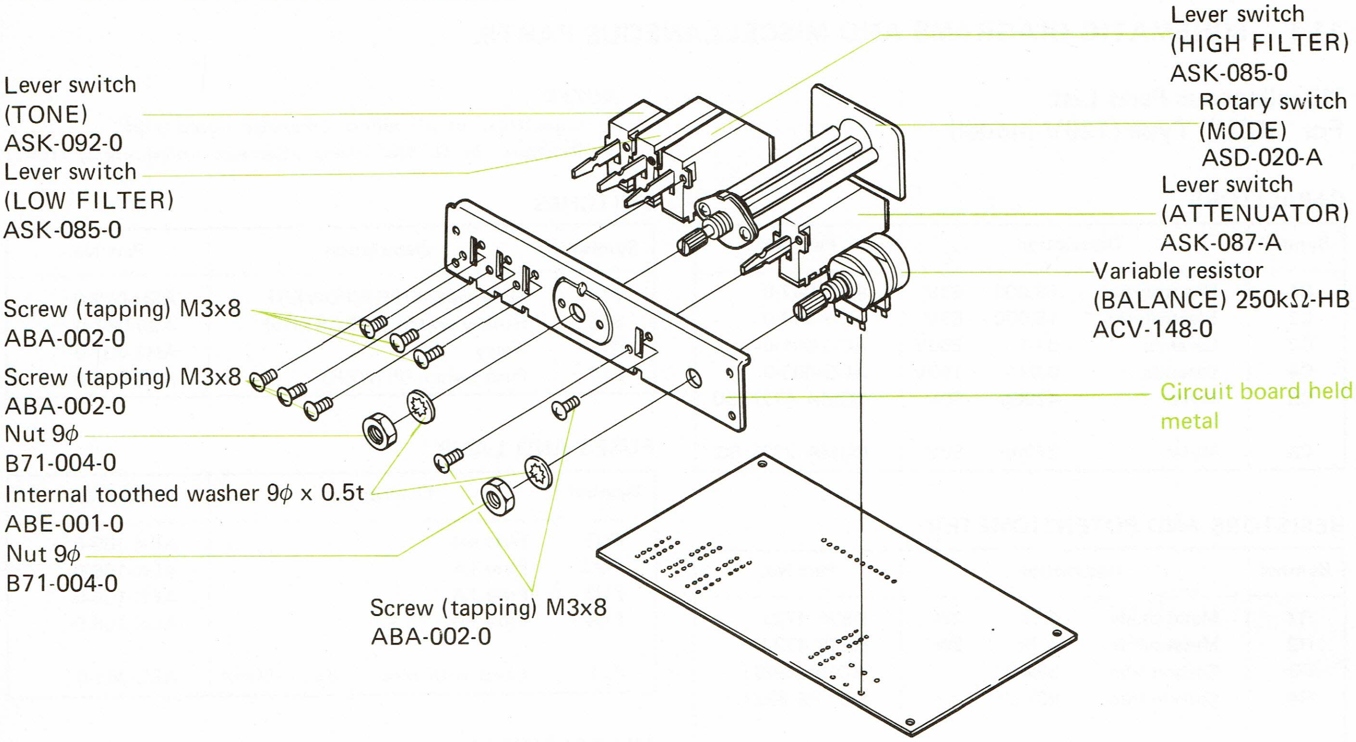

VOLUME ASSEMBLY (AWX-073-A)

NOTE:
Parts indicated in green type cannot be supplied.

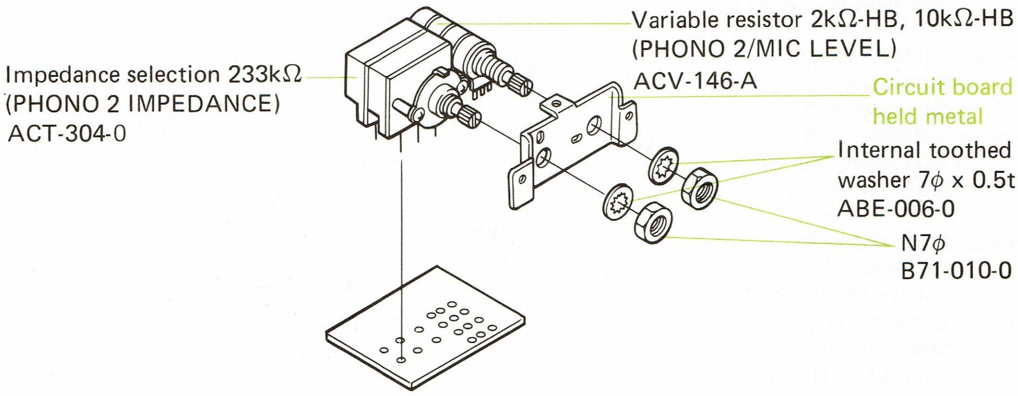

11. SCHEMATIC DIAGRAMS, P.C. BOARD PATTERNS AND PARTS LIST

11.1 SCHEMATIC DIAGRAMS AND MISCELLANEOUS PARTS.

Miscellaneous Parts List
For "KCU" Type (120V model)

NOTES:
- *Capacitors: in μF unless otherwise noted p:pF*
- *Resistors: in Ω, ¼W unless otherwise noted k:kΩ, M:MΩ*

CAPACITORS

Symbol	Description			Part No.
C1	Electrolytic	18,000	63V	ACH-047-0
C2	Electrolytic	18,000	63V	ACH-047-0
C3	Ceramic	0.01	250V	ACG-001-0
C4	Ceramic	0.01	150V	ACG-003-0
C5	Mylar	4700p	50V	CQMA 472K 50
C6	Mylar	2700p	50V	CQMA 272k 50

RESISTORS AND POTENTIOMETER

Symbol	Description			Part No.
R1	Metal oxide	4.7k	2W	RS2P 472J
R2	Metal oxide	4.7k	2W	RS2P 472J
R3	Carbon film	39k		RD¼PS 393J
R4	Carbon film	82k		RD¼PS 823J
VR2	Variable resistor (VOLUME)			ACV-144-A

SEMICONDUCTORS

Symbol	Description	Part No.
Q13	Transistor 2SD388P-S or R (2SD370S-R, O or Y) (2SC1403A-R, O or Y)	
Q14	Transistor 2SD388P-S or R (2SD370S-R, O or Y) (2SC1403A-R, O or Y)	
Q15	Transistor 2SD388P-S or R (2SD370S-R, O or Y) (2SC1403A-R, O or Y)	
Q16	Transistor 2SD388P-S or R (2SD370S-R, O or Y) (2SC1403A-R, O or Y)	
Q17	Transistor 2SB541P-S or R (2SB530S-R, O or Y) (2SA745A-R, O or Y)	
Q18	Transistor 2SB541P-S or R (2SB530S-R, O or Y) (2SA745A-R, O or Y)	
Q19	Transistor 2SB541P-S or R (2SB530S-R, O or Y) (2SA745A-R, O or Y)	
Q20	Transistor 2SB541P-S or R (2SB530S-R, O or Y) (2SA745A-R, O or Y)	

SWITCHES

Symbol	Description	Part No.
S14	Slide switch (PRE/POWER)	ASH-012-0
S15	Rotary switch (SPEAKERS)	ASB-047-0
S16	Relay	ARS-007-0
S17	Push switch (POWER)	ASG-043-B

FUSES AND LAMP

Symbol	Description	Part No.
FU1	Fuse 6A	AEK-109-0
FU2	Fuse 1A	AEK-106-0
FU3	Fuse 1A	AEK-106-0
FU4	Fuse 1A	AEK-106-0
PL1	Lamp with wire 8V, 50mA	AEL-051-0

TRANSFORMER

Symbol	Description	Part No.
T1	Power transformer	ATT-238-A

For "D" Type (3- line voltage model)

CAPACITOR

Symbol	Description			Part No.
C1	Electrolytic	18,000	63V	ACH-047-0
C2	Electrolytic	18,000	63V	ACH-047-0
C3	Ceramic	0.01	250V	ACG-001-0
C4	Ceramic	0.01	250V	ACG-001-0
C5	Mylar	4700p	50V	CQMA 472K 50
C6	Mylar	2700p	50V	CQMA 272K 50

RESISTORS AND POTENTIOMETER

Symbol	Description			Part No.
R1	Metal oxide	4.7k	2W	RS2P 472J
R2	Metal oxide	4.7k	2W	RS2P 472J
R3	Carbon film	39k		RD¼PS 393J
R4	Carbon film	82k		RD¼PS 823J
VR2	Variable resistor (VOLUME)			ACV-144-A

SEMICONDUCTORS

Symbol	Description	Part NO.
Q13	Transistor 2SD388P-S or R (2SD370S-R, O or Y) (2SC1403A-R, O or Y)	
Q14	Transistor 2SD388P-S or R (2SD370S-R, O or Y) (2SC1403A-R, O or Y)	
Q15	Transistor 2SD388P-S or R (2SD370S-R, O or Y) (2SC1403A-R, O or Y)	
Q16	Transistor 2SD388P-S or R (2SD370S-R, O or Y) (2SC1403A-R, O or Y)	
Q17	Transistor 2SB541P-S or R (2SB530S-R, O or Y) (2SA745A-R, O or Y)	
Q18	Transistor 2SB541P-S or R (2SB530S-R, O or Y) (2SA745A-R, O or Y)	
Q19	Transistor 2SB541P-S or R (2SB530S-R, O or Y) (2SA745A-R, O or Y)	
Q20	Transistor 2SB541P-S or R (2SB530S-R, O or Y) (2SA745A-R, O or Y)	

SWITCHES

Symbol	Description	Part No.
S14	Slide switch (PRE/POWER)	ASH-012-0
S15	Rotary switch (SPEAKERS)	ASB-047-0
S16	Relay	ASR-007-0
S17	Push switch (POWER)	ASG-085-0

FUSE AND LAMP

Symbol	Description	Part No.
FU1	Fuse 3A	AEL-101-0
FU2	Fuse 1A	AEL-106-0
FU3	Fuse 1A	AEL-106-0
FU4	Fuse 1A	AEL-106-0
PL1	Lamp with wire 8V, 50mA	AEL-051-0

TRANSFORMER

Symbol	Description	Part No.
T1	Power transformer	ATT-236-A

For "GN" Type (220V model)

CAPACITORS

Symbol	Description	Part No.
C1	Electrolytic 18,000 63V	ACH-047-0
C2	Electrolytic 18,000 63V	ACH-047-0
C3	....	....
C4	....	....
C5	Mylar 47000p 50V	CQMA 472K 50
C6	Mylar 2700p 50V	CQMA 272K 50
C7	Ceramic 0.047 25V	CKDBC 473Z 50
C8	Ceramic 0.047 25V	CKDBC 473Z 50

RESISTORS AND POTENTIOMETER

Symbol	Description	Part No.
R1	Metal oxide 4.7k 2W	RS2P 472J
R2	Metal oxide 4.7k 2W	RS2P 472J
R3	Carbon film 39k	RD¼PS 393J
R4	Carbon film 82k	RD¼PS 823J
VR2	Variable resistor (VOLUME)	ACV-144-A

SEMICONDUCTORS

Symbol	Description	Part No.
Q13	Transistor 2SD388P-S or R (2SD370S-R, O or Y) (2SC1403A-R, O or Y)	
Q14	Transistor 2SD388P-S or R (2SD370S-R, O or Y) (2SC1403A-R, O or Y)	
Q15	Transistor 2SD388P-S or R (2SD370S-R, O or Y) (2SC1403A-R, O or Y)	
Q16	Transistor 2SD388P-S or R (2SD370S-R, O or Y) (2SC1403A-R, O or Y)	
Q17	Transistor 2SB541P-S or R (2SD370S-R, O or Y) (2SC1403A-R, O or Y)	
Q18	Transistor 2SB541P-S or R (2SB530S-R, O or Y) (2SA745A-R, O or Y)	
Q19	Transistor 2SB541P-S or R (2SB530S-R, O or Y) (2SA745A-R, O or Y)	
Q20	Transistor 2SB541P-S or R (2SB530S-R, O or Y) (2SA745A-R, O or Y)	

SWITCHES

Symbol	Description	Part No.
S14	Slide switch (PRE/POWER)	ASH-012-0
S15	Rotary switch (SPEAKERS)	ASB-047-0
S16	Relay	ASR-007-0
S17	Push switch (POWER)	ASG-085-0

FUSES AND LAMP

Symbol	Description	Part No.
FU1	Fuse 3.15A	AEK-042-0
FU2	Fuse 1A	AEK-402-0
FU3	Fuse 1A	AEK-402-0
FU4	Fuse 1A	AEK-402-0
PL1	Lamp with wire 8V, 50mA	AEL-051-0

TRANSFORMER

Symbol	Description	Part No.
T1	Power transformer	ATT-237-A

SCHEMATIC DIAGRAMS

For "KCU" Type (120V model)

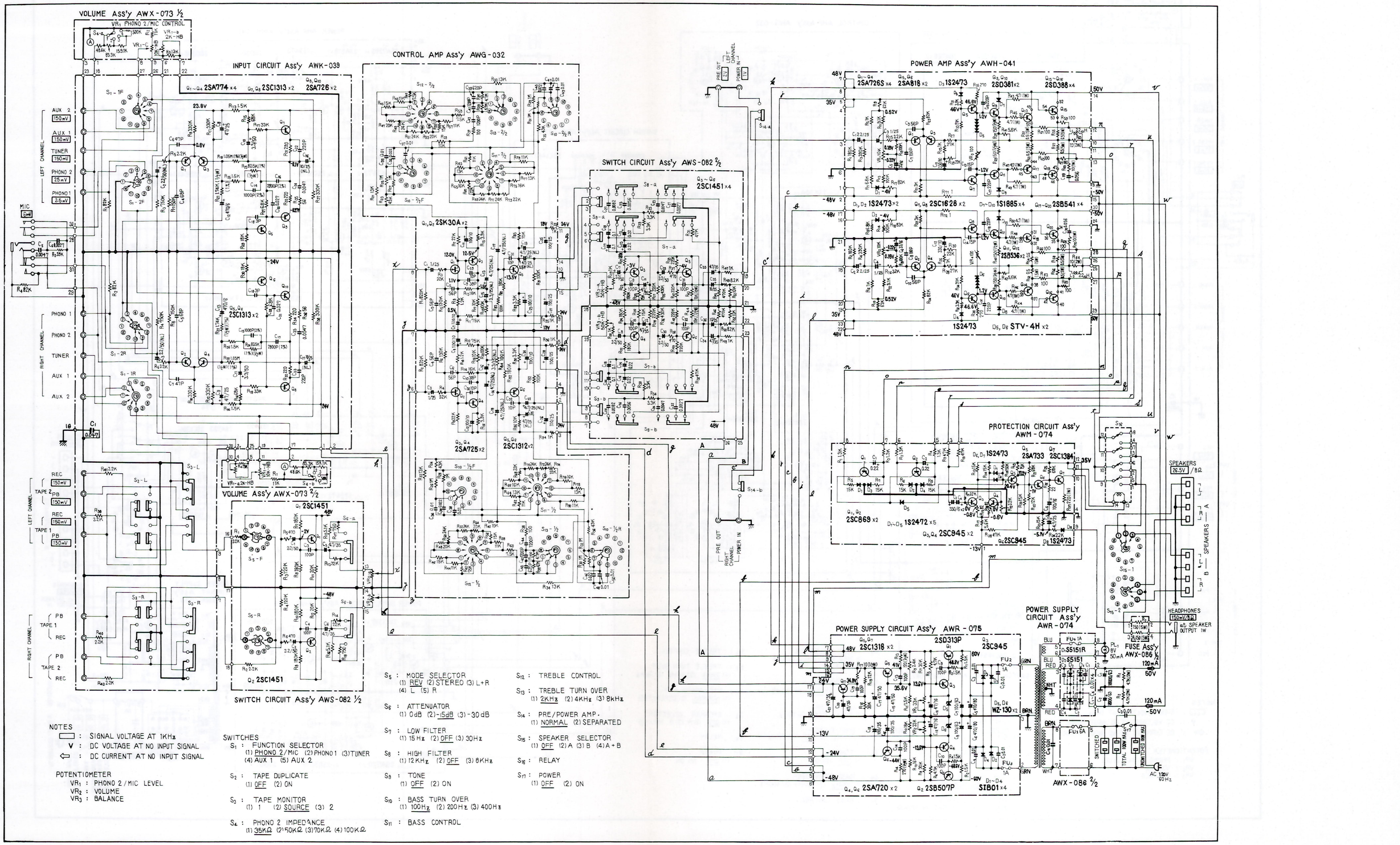

NOTES

▭ : SIGNAL VOLTAGE AT 1KHz
V : DC VOLTAGE AT NO INPUT SIGNAL
⇦ : DC CURRENT AT NO INPUT SIGNAL

POTENTIOMETER

VR_1 : PHONO 2/MIC LEVEL
VR_2 : VOLUME
VR_3 : BALANCE

SWITCHES

S_1 : FUNCTION SELECTOR
(1) PHONO 2/MIC (2) PHONO 1 (3) TUNER (4) AUX 1 (5) AUX 2

S_2 : TAPE DUPLICATE
(1) OFF (2) ON

S_3 : TAPE MONITOR
(1) 1 (2) SOURCE (3) 2

S_4 : PHONO 2 IMPEDANCE
(1) 35KΩ (2) 50KΩ (3) 70KΩ (4) 100KΩ

S_5 : MODE SELECTOR
(1) REV (2) STEREO (3) L+R (4) L (5) R

S_6 : ATTENUATOR
(1) 0dB (2) -15dB (3) -30dB

S_7 : LOW FILTER
(1) 15Hz (2) OFF (3) 30Hz

S_8 : HIGH FILTER
(1) 12KHz (2) OFF (3) 8KHz

S_9 : TONE
(1) OFF (2) ON

S_{10} : BASS TURN OVER
(1) 100Hz (2) 200Hz (3) 400Hz

S_{11} : BASS CONTROL

S_{12} : TREBLE CONTROL

S_{13} : TREBLE TURN OVER
(1) 2KHz (2) 4KHz (3) 8kHz

S_{14} : PRE/POWER AMP.
(1) NORMAL (2) SEPARATED

S_{15} : SPEAKER SELECTOR
(1) OFF (2) A (3) B (4) A+B

S_{16} : RELAY

S_{17} : POWER
(1) OFF (2) ON

For "D" Type (3- line voltage model)

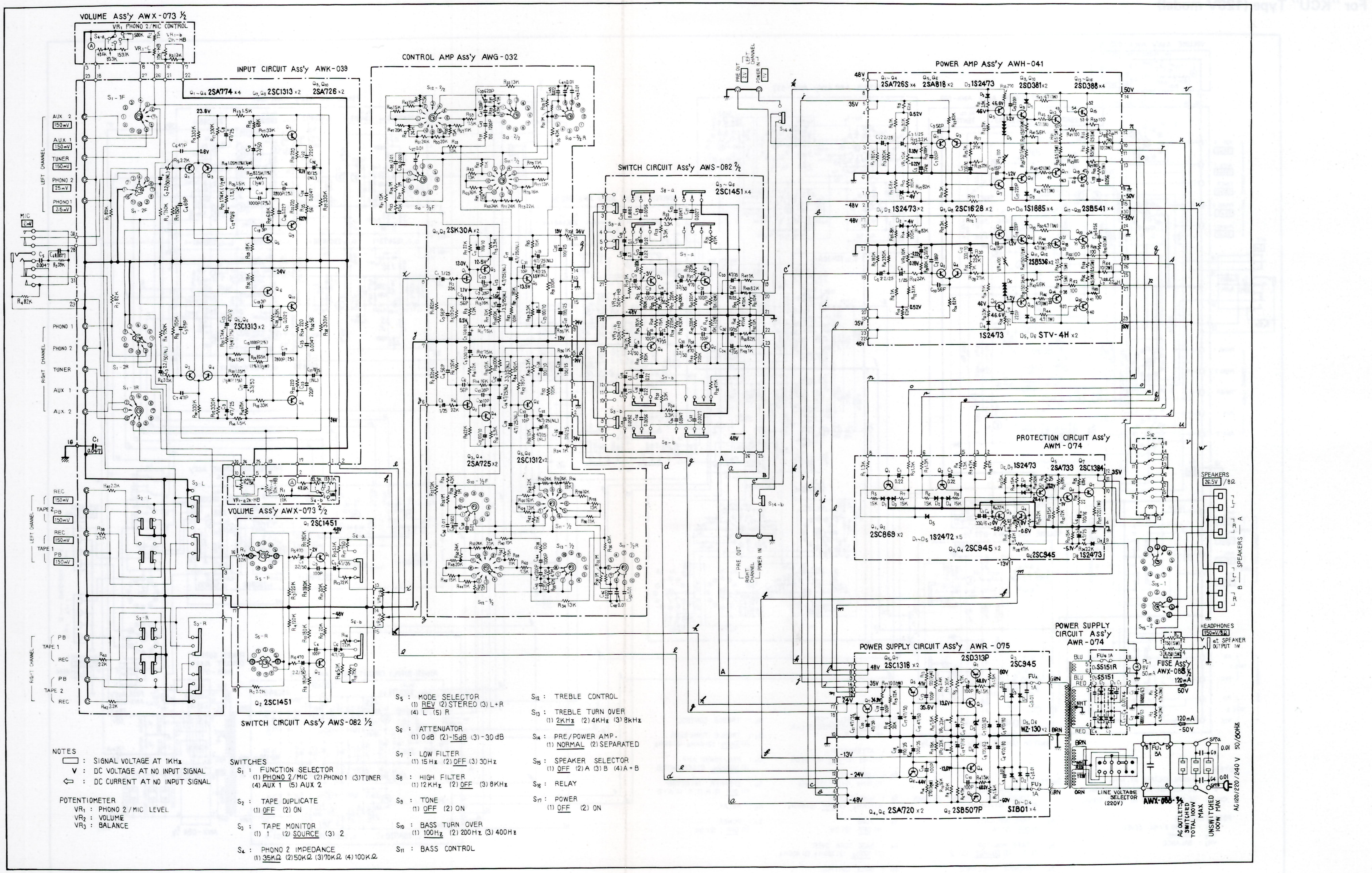

For "GN" Type (220V model)

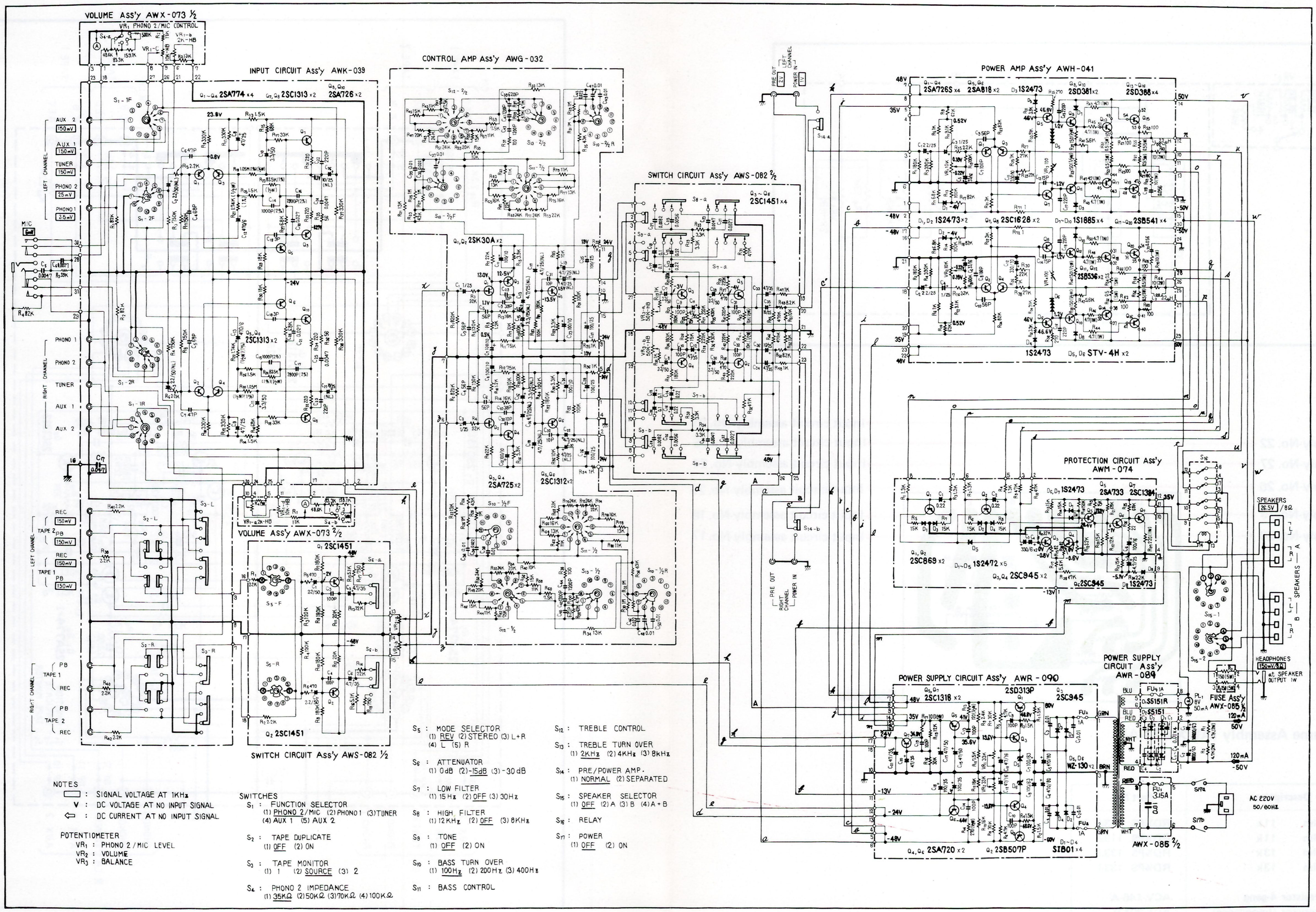

11.2 VOLUME ASSEMBLY (AWX-073-A)

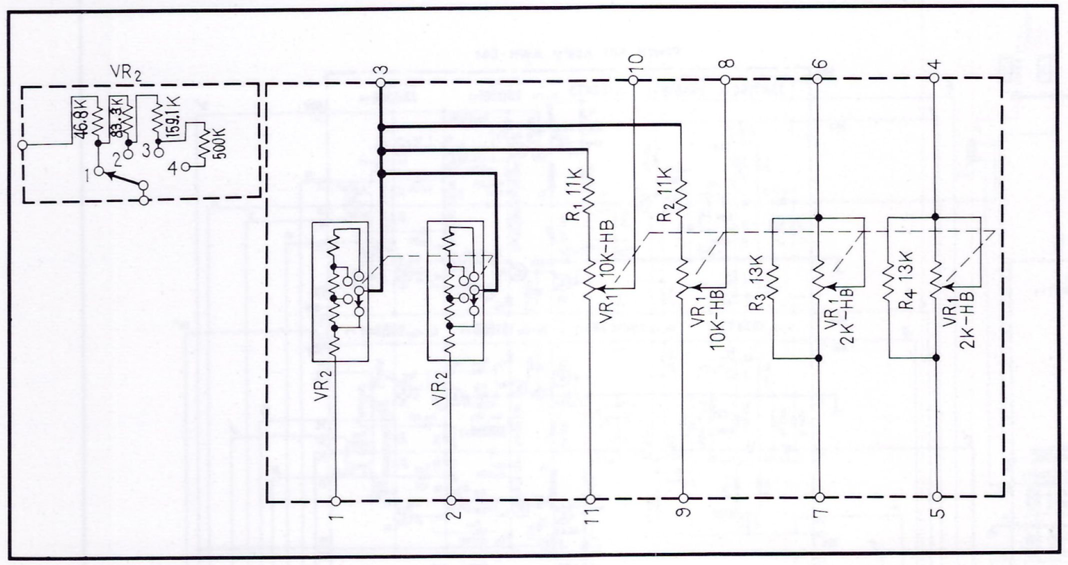

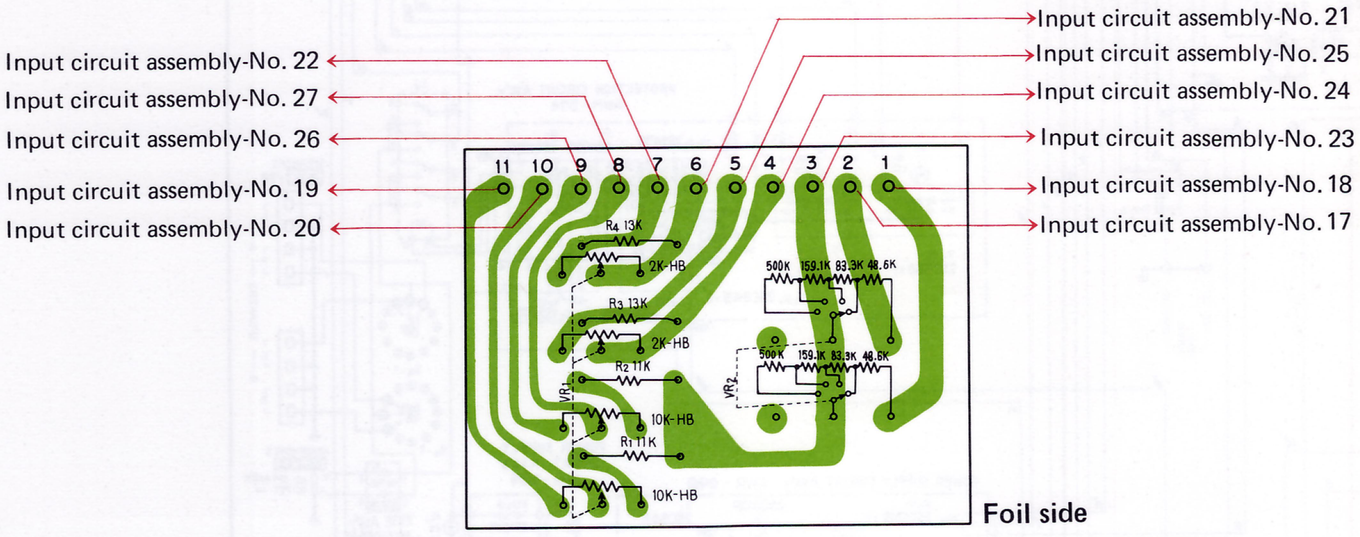

Foil side

Parts List of Volume Assembly (AWX-073-A)

RESISTORS

Symbol	Description	Part No.
R1	Carbon film 11k	RD¼PS 113J
R2	Carbon film 11k	RD¼PS 113J
R3	Carbon film 13k	RD¼PS 133J
R4	Carbon film 13k	RD¼PS 133J
VR1	Variable resistor 4-gang	ACV-146-A
VR2	Variable resistor (Impedance)	ACT-304-0

11.3 INPUT CIRCUIT ASSEMBLY (AWK-039-C)

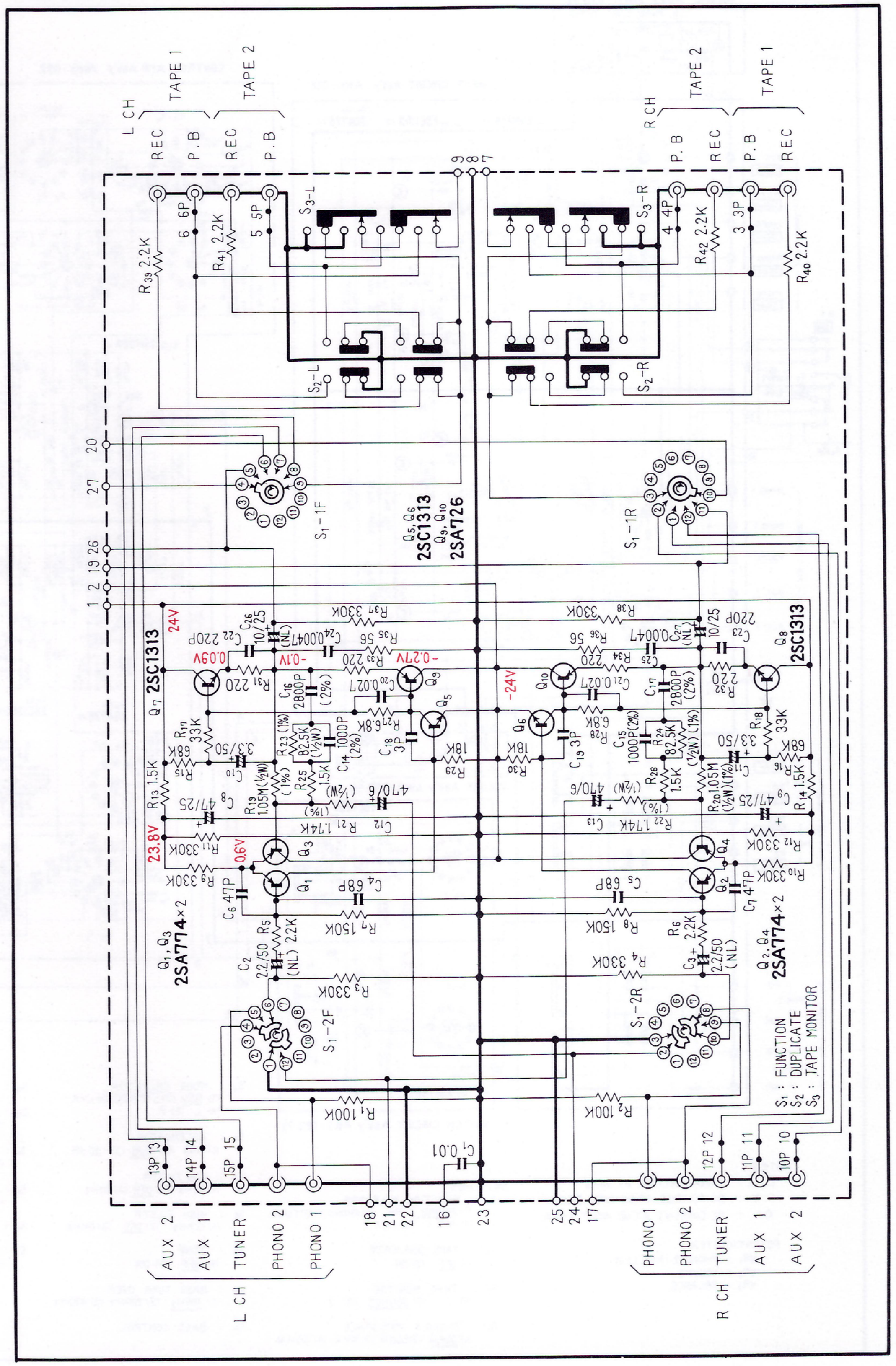

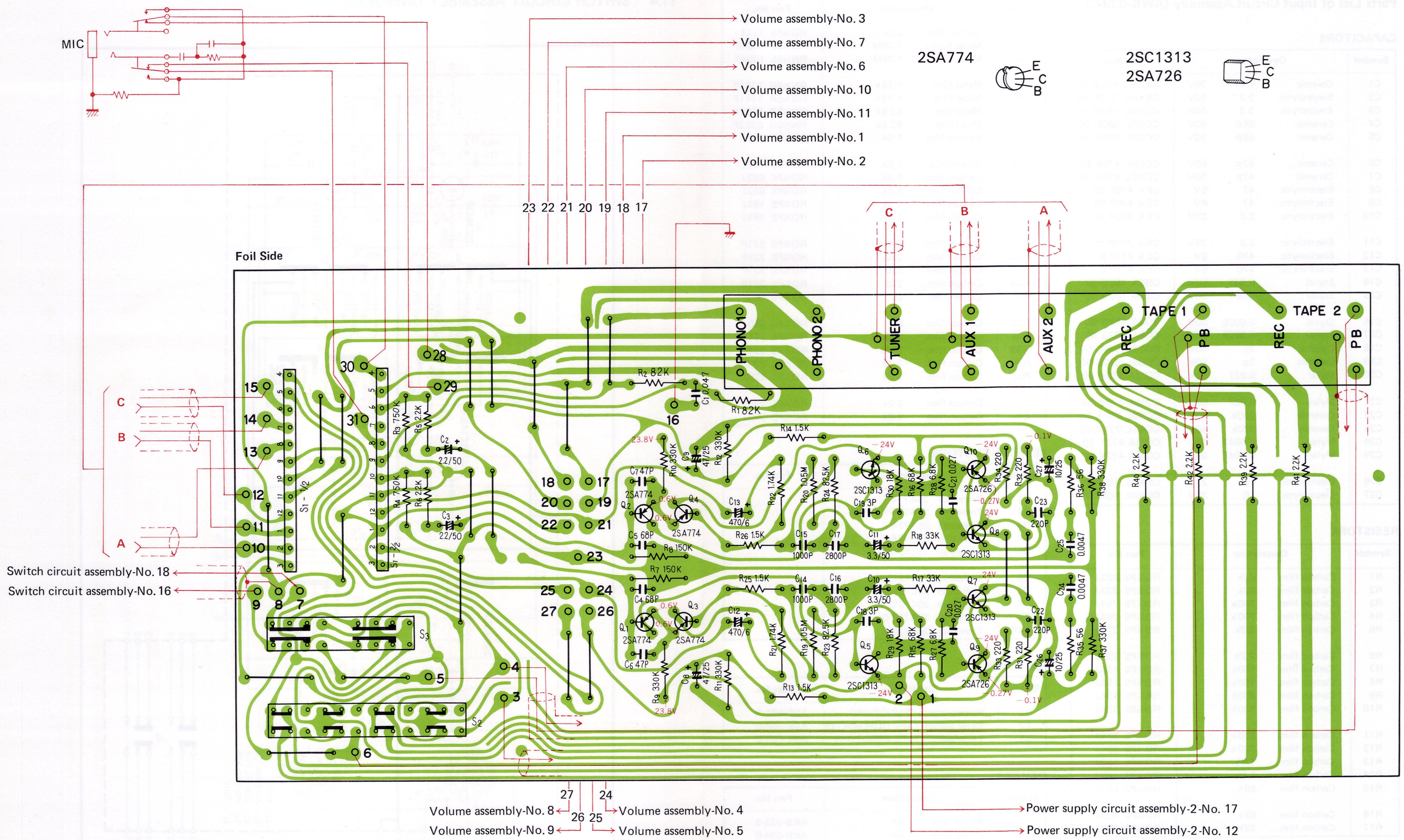
MIC
Volume assembly-No. 3
Volume assembly-No. 7
Volume assembly-No. 6
Volume assembly-No. 10
Volume assembly-No. 11
Volume assembly-No. 1
Volume assembly-No. 2
2SA774
2SC1313
2SA726
E
C
B
Foil Side
PHONO1
PHONO2
TUNER
AUX 1
AUX 2
TAPE 1
TAPE 2
REC
PB
Switch circuit assembly-No. 18
Switch circuit assembly-No. 16
Volume assembly-No. 8
Volume assembly-No. 9
Volume assembly-No. 4
Volume assembly-No. 5
Power supply circuit assembly-2-No. 17
Power supply circuit assembly-2-No. 12

Parts List of Input Circuit Assembly (AWK-039-C)

CAPACITORS

Symbol	Description			Part No.
C1	Ceramic	0.047	25V	CKDBC 473Z 25
C2	Electrolytic	2.2	50V	CEANL 2R2P 50
C3	Electrolytic	2.2	50V	CEANL 2R2P 50
C4	Ceramic	68p	50V	CCDSL 680K 50
C5	Ceramic	68p	50V	CCDSL 680K 50
C6	Ceramic	47p	50V	CCDSL 470K 50
C7	Ceramic	47p	50V	CCDSL 470K 50
C8	Electrolytic	47	6V	CEA 470P 25
C9	Electrolytic	47	6V	CEA 470P 25
C10	Electrolytic	3.3	25V	CEA 3R3P 50
C11	Electrolytic	3.3	25V	CEA 3R3P 50
C12	Electrolytic	470	6V	CEA 471P 6
C13	Electrolytic	470	6V	CEA 471P 6
C14	Styrol	0.001	50V	CQSA 102G 50
C15	Styrol	0.001	50V	CQSA 102G 50
C16	Styrol	0.0028	50V	CQSA 282G 50
C17	Styrol	0.0028	50V	CQSA 282G 50
C18	Ceramic	3p	50V	CCDSL 030C 50
C19	Ceramic	3p	50V	CCDSL 030C 50
C20	Mylar	0.027	50V	CQMA 273K 50
C21	Mylar	0.027	50V	CQMA 273K 50
C22	Ceramic	220k	50V	CCDSL 221K 50
C23	Ceramic	220k	50V	CCDSL 221K 50
C24	Mylar	0.0047	50V	CQMA 472K 50
C25	Mylar	0.0047	50V	CQMA 472K 50
C26	Electrolytic	10	25V	CEANL 100P 25
C27	Electrolytic	10	25V	CEANL 100P 25

RESISTORS

Symbol	Description		Part No.
R1	Carbon film	82k	RD¼PS 823J
R2	Carbon film	82k	RD¼PS 823J
R3	Carbon film	750k	RD¼PS 754J
R4	Carbon film	750k	RD¼PS 754J
R5	Carbon film	2.2k	RD¼PS 222J
R6	Carbon film	2.2k	RD¼PS 222J
R7	Carbon film	150k	RD¼PS 154J
R8	Carbon film	150k	RD¼PS 154J
R9	Carbon film	330k	RD¼PS 334J
R10	Carbon film	330k	RD¼PS 334J
R11	Carbon film	330k	RD¼PS 334J
R12	Carbon film	330k	RD¼PS 334J
R13	Carbon film	1.5k	RD¼PS 152J
R14	Carbon film	1.5k	RD¼PS 152J
R15	Carbon film	68k	RD¼PS 683J
R16	Carbon film	68k	RD¼PS 683J
R17	Carbon film	33k	RD¼PS 333J
R18	Carbon film	33k	RD¼PS 333J
R19	Metal film	1.05M	RN½SS 1054F
R20	Metal film	1.05M	RN½SS 1054F
R21	Metal film	1.74k	RN½SR 1741F
R22	Metal film	1.74k	RN½SR 1741F
R23	Metal film	82.5k	RN½SR 8252F
R24	Metal film	82.5k	RN½SR 8252F
R25	Carbon film	1.5k	RD¼PS 152J
R26	Carbon film	1.5k	RD¼PS 152J
R27	Carbon film	6.8k	RD¼PS 682J
R28	Carbon film	6.8k	RD¼PS 682J
R29	Carbon film	1 8k	RD¼PS 183J
R30	Carbon film	1 8k	RD¼PS 183J
R31	Carbon film	220	RD¼PS 221P
R32	Carbon film	220	RD¼PS 221P
R33	Carbon film	220	RD¼PS 221P
R34	Carbon film	220	RD¼PS 221P
R35	Carbon film	56	RD¼PS 560J
R36	Carbon film	56	RD¼PS 560J
R37	Carbon film	330k	RD¼PS 334J
R38	Carbon film	330k	RD¼PS 334J
R39	Carbon film	2.2k	RD¼PS 222J
R40	Carbon film	2.2k	RD¼PS 222J
R41	Carbon film	2.2k	RD¼PS 222J
R42	Carbon film	2.2k	RD¼PS 222J

SEMICONDUCTORS

Symbol	Description	Part No.
Q1	Transistor 2SA774-T	
Q2	Transistor 2SA774-T	
Q3	Transistor 2SA774-T	
Q4	Transistor 2SA774-T	
Q5	Transistor 2SC1313-G	
Q6	Transistor 2SC1313-G	
Q7	Transistor 2SC1313-G	
Q8	Transistor 2SC1313-G	
Q9	Transistor 2SA726-G	
Q10	Transistor 2SA726-G	

SWITCHES

Symbol	Description	Part No.
S1	Rotary switch (FUNCTION)	ASD-021-A
S2	Lever switch(TAPE DUPLICATE)	ASK-084-0
S3	Lever switch(TAPE MONITOR)	ASK-086-B

OTHERS

Symbol	Description		Part No.
	Phono jack	4p	AKB-023-0
	Phono jack	6p	AKB-024-0

11.4 SWITCH CIRCUIT ASSEMBLY (AWS-082-0)

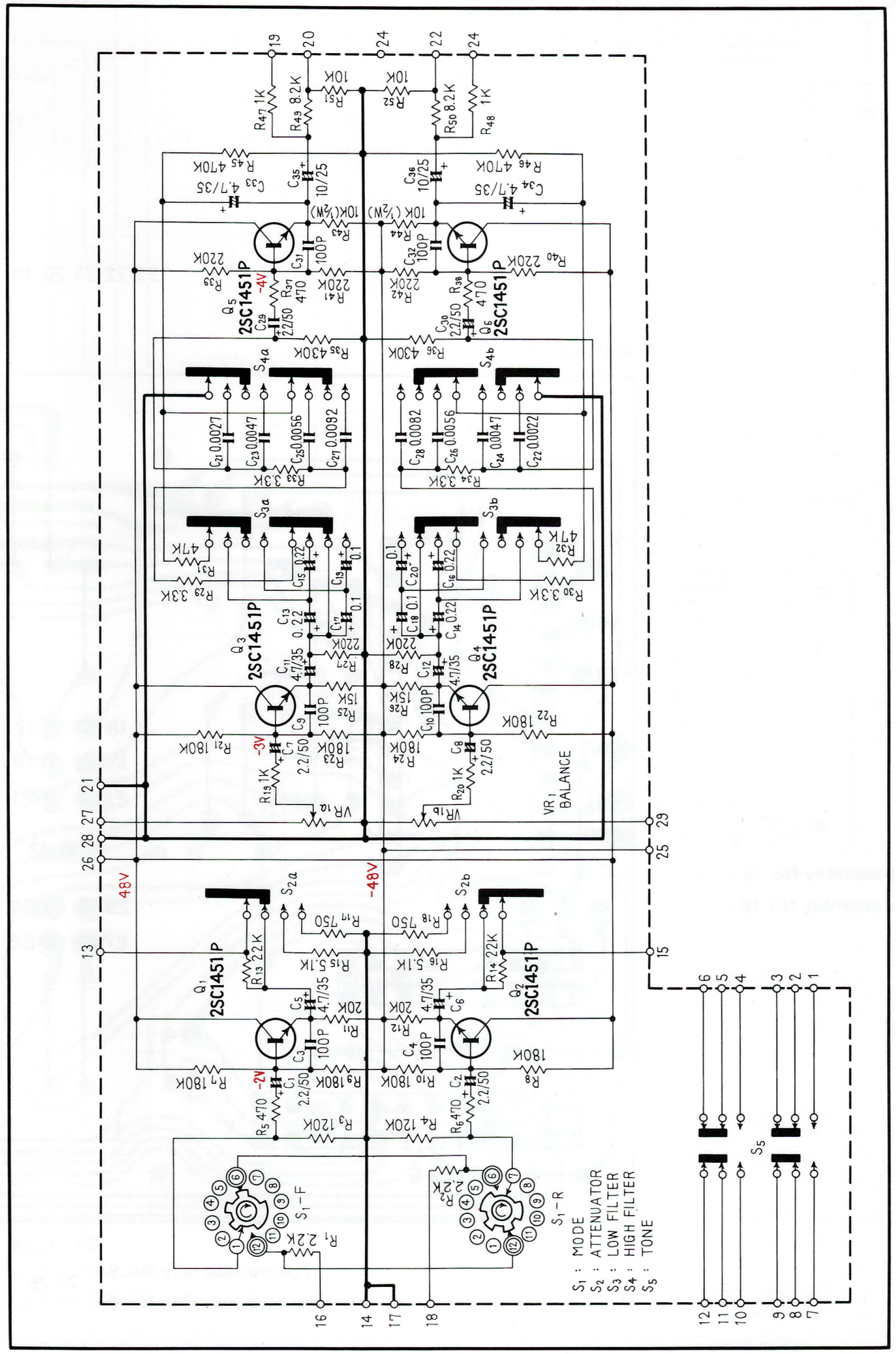

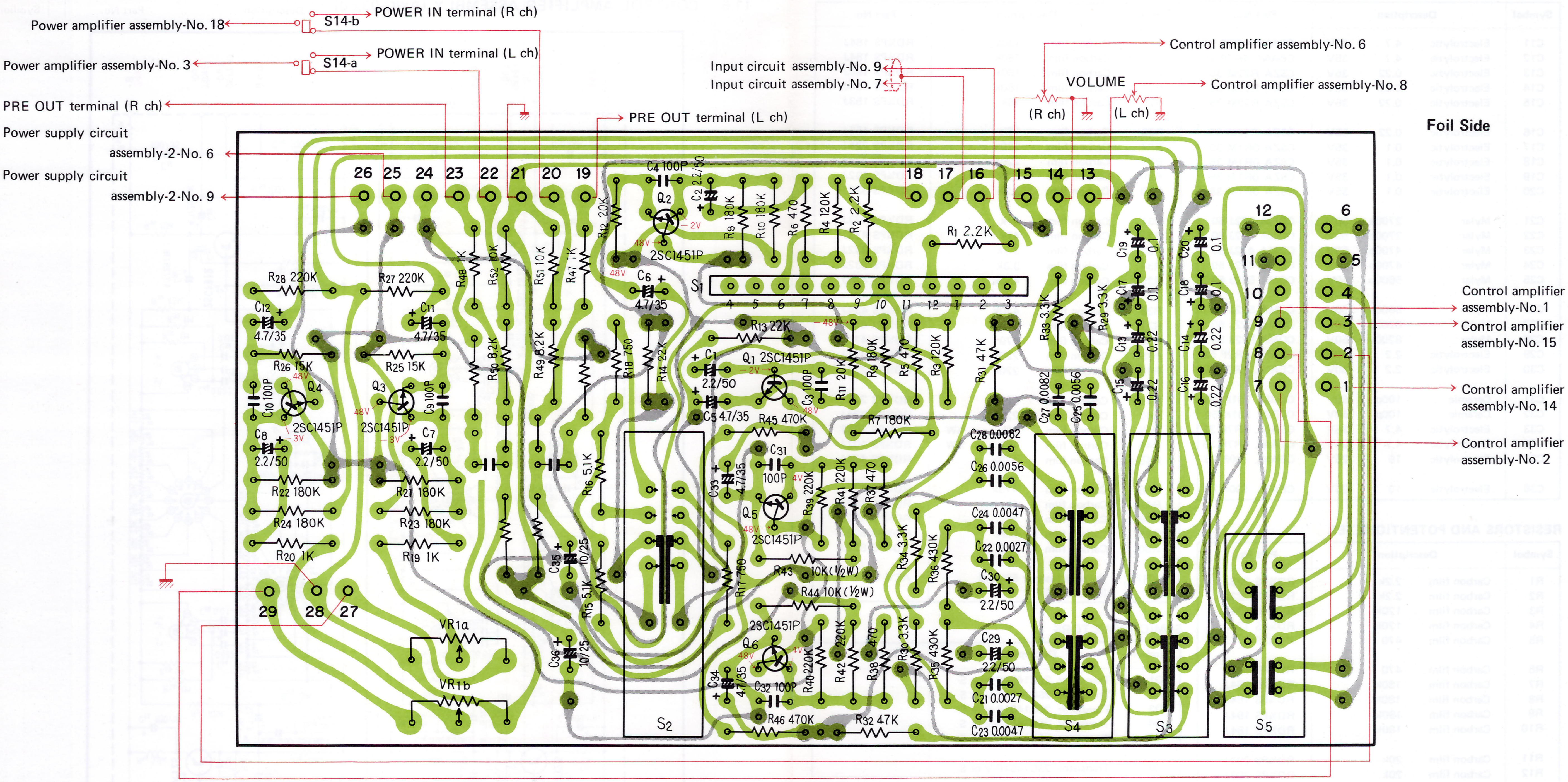

Parts List of Switch Circuit Assembly (AWS-082-0)

2SC1451P

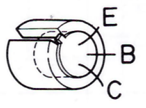

CAPACITORS

Symbol	Description			Part No.
C1	Electrolytic	2.2	50V	CEANL 2R2P 50
C2	Electrolytic	2.2	50V	CEANL 2R2P 50
C3	Ceramic	100p	50V	CCDSL 101K 50
C4	Ceramic	100p	50V	CCDSL 101K 50
C5	Electrolytic	4.7	35V	CEANL 4R7P 35

Symbol	Description			Part No.
C6	Electrolytic	4.7	35V	CEANL 4R7P 35
C7	Electrolytic	2.2	50V	CEANL 2R2P 50
C8	Electrolytic	2.2	50V	CEANL 2R2P 50
C9	Ceramic	100p	50V	CCDSL 101K 50
C10	Ceramic	100p	50V	CCDSL 101K 50

Symbol	Description			Part No.
C11	Electrolytic	4.7	35V	CEANL 4R7P 35
C12	Electrolytic	4.7	35V	CEANL 4R7P 35
C13	Electrolytic	0.22	35V	CSZA R22M 35
C14	Electrolytic	0.22	35V	CSZA R22M 35
C15	Electrolytic	0.22	35V	CSZA R22M 35
C16	Electrolytic	0.22	35V	CSZA R22M 35
C17	Electrolytic	0.1	35V	CSZA 0R1M 35
C18	Electrolytic	0.1	35V	CSZA 0R1M 35
C19	Electrolytic	0.1	35V	CSZA 0R1M 35
C20	Electrolytic	0.1	35V	CSZA 0R1M 35
C21	Mylar	2700p	50V	CQMA 272J 50
C22	Mylar	2700p	50V	CQMA 272J 50
C23	Mylar	4700p	50V	CQMA 472J 50
C24	Mylar	4700p	50V	CQMA 472J 50
C25	Mylar	5600p	50V	CQMA 562J 50
C26	Mylar	5600p	50V	CQMA 562J 50
C27	Mylar	8200p	50V	CQMA 822J 50
C28	Mylar	8200p	50V	CQMA 822J 50
C29	Electrolytic	2.2	50V	CEANL 2R2P 50
C30	Electrolytic	2.2	50V	CEANL 2R2P 50
C31	Ceramic	100p	50V	CCDSL 101K 50
C32	Ceramic	100p	50V	CCDSL 101K 50
C33	Electrolytic	4.7	35V	CEANL 4R7P 35
C34	Electrolytic	4.7	35V	CEANL 4R7P 35
C35	Electrolytic	10	25V	CEANL 100P 25
C36	Electrolytic	10	25V	CEANL 100P 25

RESISTORS AND POTENTIOMETER

Symbol	Description			Part No.
R1	Carbon film	2.2k		RD¼PS 222J
R2	Carbon film	2.2k		RD¼PS 222J
R3	Carbon film	120k		RD¼PS 124J
R4	Carbon film	120k		RD¼PS 124J
R5	Carbon film	470		RD¼PS 471J
R6	Carbon film	470		RD¼PS 471J
R7	Carbon film	180k		RD¼PS 184J
R8	Carbon film	180k		RD¼PS 184J
R9	Carbon film	180k		RD¼PS 184J
R10	Carbon film	180k		RD¼PS 184J
R11	Carbon film	20k		RD¼PS 203J
R12	Carbon film	20k		RD¼PS 203J
R13	Carbon film	22k		RD¼PS 223J
R14	Carbon film	22k		RD¼PS 223J
R15	Carbon film	5.1k		RD¼PS 512J
R16	Carbon film	5.1k		RD¼PS 512J
R17	Carbon film	750		RD¼PS 751J
R18	Carbon film	750		RD¼PS 751J
R19	Carbon film	1k		RD¼PS 102J
R20	Carbon film	1k		RD¼PS 102J
R21	Carbon film	180k		RD¼PS 184J
R22	Carbon film	180k		RD¼PS 184J
R23	Carbon film	180k		RD¼PS 184J
R24	Carbon film	180k		RD¼PS 184J
R25	Carbon film	15k		RD¼PS 153J
R26	Carbon film	15k		RD¼PS 153J
R27	Carbon film	220k		RD¼PS 224J
R28	Carbon film	220k		RD¼PS 224J
R29	Carbon film	3.3k		RD¼PS 332J
R30	Carbon film	3.3k		RD¼PS 332J
R31	Carbon film	47k		RD¼PS 473J
R32	Carbon film	47k		RD¼PS 473J
R33	Carbon film	3.3k		RD¼PS 332J
R34	Carbon film	3.3k		RD¼PS 332J
R35	Carbon film	430k		RD¼PS 434J
R36	Carbon film	430k		RD¼PS 434J
R37	Carbon film	470		RD¼PS 471J
R38	Carbon film	470		RD¼PS 471J
R39	Carbon film	220k		RD¼PS 224J
R40	Carbon film	220k		RD¼PS 224J
R41	Carbon film	220k		RD¼PS 224J
R42	Carbon film	220k		RD¼PS 224J
R43	Carbon film	10k	½W	RD½PS 103J
R44	Carbon film	10k	½W	RD½PS 103J
R45	Carbon film	470k		RD¼PS 474J
R46	Carbon film	470k		RD¼PS 474J
R47	Carbon film	1k		RD¼PS 102J
R48	Carbon film	1k		RD¼PS 102J
R49	Carbon film	8.2k		RD¼PS 822J
R50	Carbon film	8.2k		RD¼PS 822J
VR1	Variable resistor 50k-HB (BALANCE)			ACV-148-0

SEMICONDUCTORS

Symbol	Description	Part No.
Q1	Transistor 2SC1451P-V or S	
Q2	Transistor 2SC1451P-V or S	
Q3	Transistor 2SC1451P-V or S	
Q4	Transistor 2SC1451P-V or S	
Q5	Transistor 2SC1451P-V or S	
Q6	Transistor 2SC1451P-V or S	

SWITCHES

Symbol	Description	Part No.
S1	Rotary switch (MODE)	ASD-020-A
S2	Lever switch (ATTENUATOR)	ASK-087-A
S3	Lever switch (LOW FILTER)	ASK-085-0
S4	Lever switch (HIGH FILTER)	ASK-085-0
S5	Lever switch (TONE)	ASK-092-0

11.5 CONTROL AMPLIFIER ASSEMBLY (AWG-032-0)

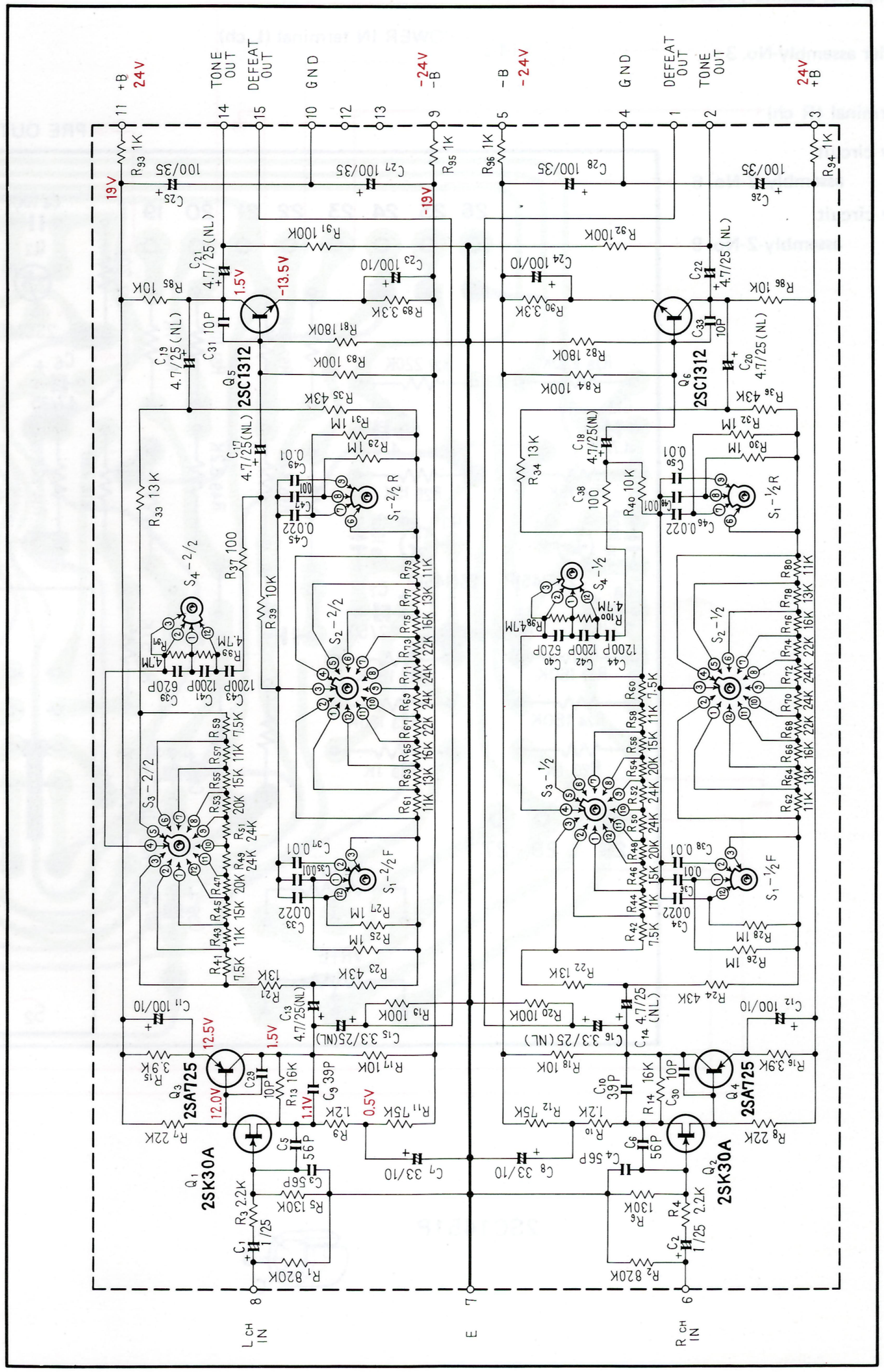

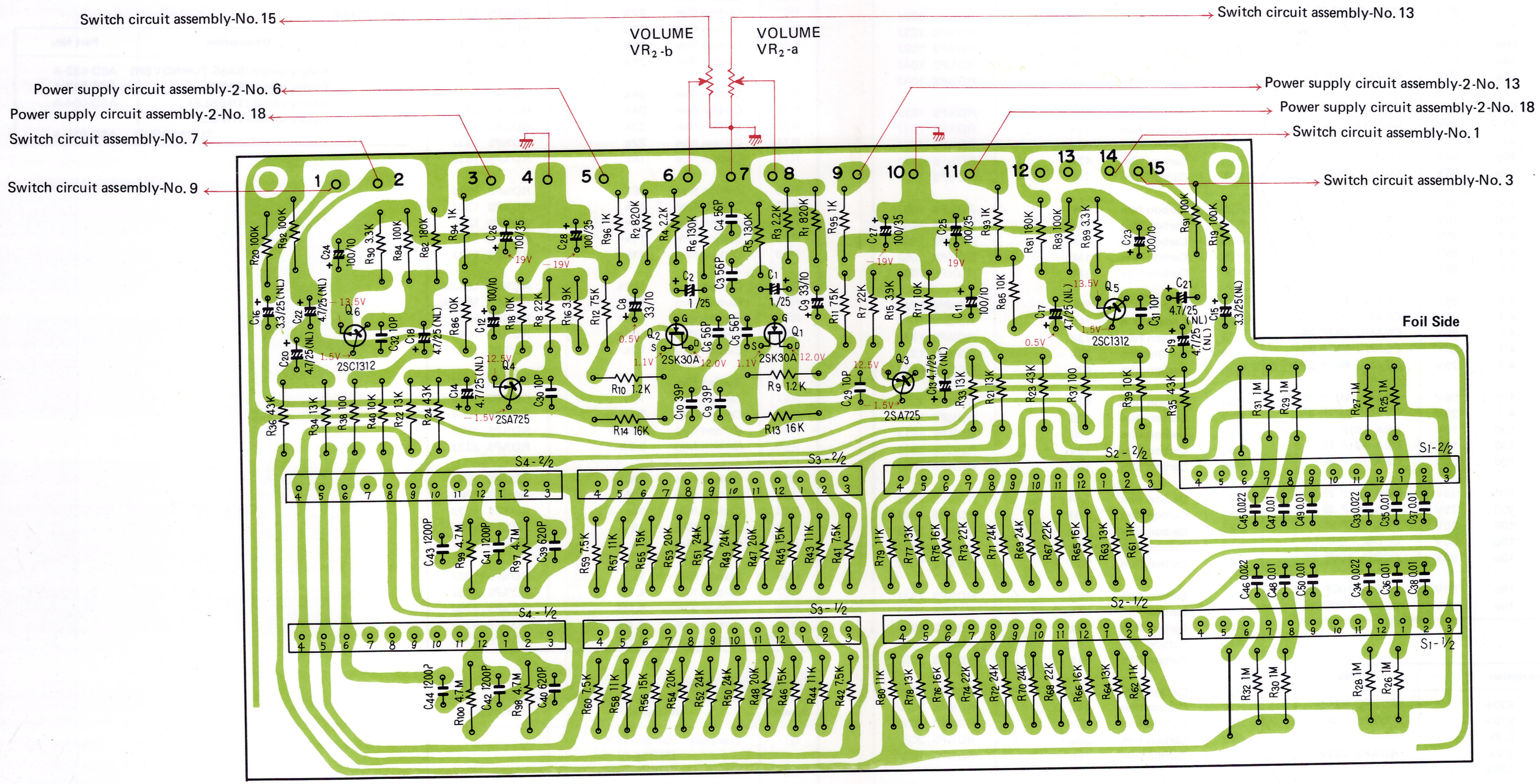

Switch circuit assembly-No. 15
VOLUME
VR2-b
VOLUME
VR2-a
Switch circuit assembly-No. 13
Power supply circuit assembly-2-No. 6
Power supply circuit assembly-2-No. 18
Switch circuit assembly-No. 7
Switch circuit assembly-No. 9
Power supply circuit assembly-2-No. 13
Power supply circuit assembly-2-No. 18
Switch circuit assembly-No. 1
Switch circuit assembly-No. 3
Foil Side
1
2
3
4
5
6
7
8
9
10
11
12
13
14
15
2SC1312
2SA725
2SK30A
S4-2/2
S3-2/2
S2-2/2
S1-2/2
S4-1/2
S3-1/2
S2-1/2
S1-1/2

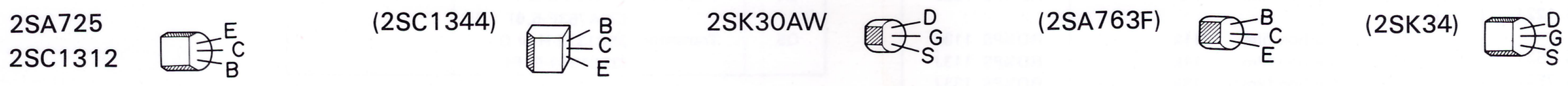

2SA725
2SC1312
E
C
B
(2SC1344)
B
C
E
2SK30AW
D
G
S
(2SA763F)
B
C
E
(2SK34)
D
G
S

Parts List of Control Amplifier Assembly (AWG-032-0)

CAPACITORS

Symbol	Description			Part No.
C1	Electrolytic	1	25V	CSSA 010M 25
C2	Electrolytic	1	25V	CSSA 010M 25
C3	Ceramic	56p	50V	CCDSL 560K 50
C4	Ceramic	56p	50V	CCDSL 560K 50
C5	Ceramic	56p	50V	CCDSL 560K 50
C6	Ceramic	56p	50V	CCDSL 560K 50
C7	Electrolytic	33	10V	CEA 330P 10
C8	Electrolytic	33	10V	CEA 330P 10
C9	Ceramic	39p	50V	CCDSL 390K 50
C10	Ceramic	39p	50V	CCDSL 390K 50
C11	Electrolytic	100	10V	CEA 101P 10
C12	Electrolytic	100	10V	CEA 101P 10
C13	Electrolytic	4.7	25V	CEANL 4R7P 25
C14	Electrolytic	4.7	25V	CEANL 4R7P 25
C15	Electrolytic	3.3	25V	CEANL 3R3P 25
C16	Electrolytic	3.3	25V	CEANL 3R3P 25
C17	Electrolytic	4.7	25V	CEANL 4R7P 25
C18	Electrolytic	4.7	25V	CEANL 4R7P 25
C19	Electrolytic	4.7	25V	CEANL 4R7P 25
C20	Electrolytic	4.7	25V	CEANL 4R7P 25
C21	Electrolytic	4.7	25V	CEANL 4R7P 25
C22	Electrolytic	4.7	25V	CEANL 4R7P 25
C23	Electrolytic	100	10V	CEA 101P 10
C24	Electrolytic	100	10V	CEA 101P 10
C25	Electrolytic	100	35V	CEA 101P 35
C26	Electrolytic	100	35V	CEA 101P 35
C27	Electrolytic	100	35V	CEA 101P 35
C28	Electrolytic	100	35V	CEA 101P 35
C29	Ceramic	10p	50V	CCDSL 100F 50
C30	Ceramic	10p	50V	CCDSL 100F 50
C31	Ceramic	10p	50V	CCDSL 100F 50
C32	Ceramic	10p	50V	CCDSL 100F 50

RESISTORS

Symbol	Description		Part No.
R1	Carbon film	820k	RD¼PS 824J
R2	Carbon film	820k	RD¼PS 824J
R3	Carbon film	2.2k	RD¼PS 222J
R4	Carbon film	2.2k	RD¼PS 222J
R5	Carbon film	130k	RD¼PS 134J
R6	Carbon film	130k	RD¼PS 134J
R7	Carbon film	22k	RD¼PS 223J
R8	Carbon film	22k	RD¼PS 223J
R9	Carbon film	1.2k	RD¼PS 122J
R10	Carbon film	1.2k	RD¼PS 122J
R11	Carbon film	75k	RD¼PS 753J
R12	Carbon film	75k	RD¼PS 753J
R13	Carbon film	16k	RD¼PS 163J
R14	Carbon film	16k	RD¼PS 163J
R15	Carbon film	3.9k	RD¼PS 392J
R16	Carbon film	3.9k	RD¼PS 392J
R17	Carbon film	10k	RD¼PS 103J
R18	Carbon film	10k	RD¼PS 103J
R19	Carbon film	100k	RD¼PS 104J
R20	Carbon film	100k	RD¼PS 104J
R21	Carbon film	13k	RD¼PS 133J
R22	Carbon film	13k	RD¼PS 133J
R23	Carbon film	43k	RD¼PS 433J
R24	Carbon film	43k	RD¼PS 433J
R25	Carbon film	1M	RD¼PS 105J
R26	Carbon film	1M	RD¼PS 105J
R27	Carbon film	1M	RD¼PS 105J
R28	Carbon film	1M	RD¼PS 105J
R29	Carbon film	1M	RD¼PS 105J
R30	Carbon film	1M	RD¼PS 105J
R31	Carbon film	1M	RD¼PS 105J
R32	Carbon film	1M	RD¼PS 105J
R33	Carbon film	13k	RD¼PS 133J
R34	Carbon film	13k	RD¼PS 133J
R35	Carbon film	43k	RD¼PS 433J
R36	Carbon film	43k	RD¼PS 433J
R37	Carbon film	100	RD¼PS 101J
R38	Carbon film	100	RD¼PS 101J
R39	Carbon film	10k	RD¼PS 103J
R40	Carbon film	10k	RD¼PS 103J
R41	Carbon film	7.5k	RD¼PS 752J
R42	Carbon film	7.5k	RD¼PS 752J
R43	Carbon film	11k	RD¼PS 113J
R44	Carbon film	11k	RD¼PS 113J
R45	Carbon film	15k	RD¼PS 153J
R46	Carbon film	15k	RD¼PS 153J
R47	Carbon film	20k	RD¼PS 203J
R48	Carbon film	20k	RD¼PS 203J
R49	Carbon film	24k	RD¼PS 243J
R50	Carbon film	24k	RD¼PS 243J
R51	Carbon film	24k	RD¼PS 243J
R52	Carbon film	24k	RD¼PS 243J
R53	Carbon film	20k	RD¼PS 203J
R54	Carbon film	20k	RD¼PS 203J
R55	Carbon film	15k	RD¼PS 153J
R56	Carbon film	15k	RD¼PS 153J
R57	Carbon film	11k	RD¼PS 113J
R58	Carbon film	11k	RD¼PS 113J
R59	Carbon film	7.5k	RD¼PS 752J
R60	Carbon film	7.5k	RD¼PS 752J
R61	Carbon film	11k	RD¼PS 113J
R62	Carbon film	11k	RD¼PS 113J
R63	Carbon film	13k	RD¼PS 133J

Symbol	Description		Part No.
R64	Carbon film	13k	RD¼PS 133J
R65	Carbon film	16k	RD¼PS 163J
R66	Carbon film	16k	RD¼PS 163J
R67	Carbon film	22k	RD¼PS 223J
R68	Carbon film	22k	RD¼PS 223J
R69	Carbon film	24k	RD¼PS 243J
R70	Carbon film	24k	RD¼PS 243J
R71	Carbon film	24k	RD¼PS 243J
R72	Carbon film	24k	RD¼PS 243J
R73	Carbon film	22k	RD¼PS 223J
R74	Carbon film	22k	RD¼PS 223J
R75	Carbon film	16k	RD¼PS 163J
R76	Carbon film	16k	RD¼PS 163J
R77	Carbon film	13k	RD¼PS 133J
R78	Carbon film	13k	RD¼PS 133J
R79	Carbon film	11k	RD¼PS 113J
R80	Carbon film	11k	RD¼PS 113J
R81	Carbon film	180k	RD¼PS 184JNL
R82	Carbon film	180k	RD¼PS 184JNL
R83	Carbon film	100k	RD¼PS 104J
R84	Carbon film	100k	RD¼PS 104J
R85	Carbon film	10k	RD¼PS 103J
R86	Carbon film	10k	RD¼PS 103J
R87	Carbon film	100	RD¼PS 101J
R88	Carbon film	100	RD¼PS 101J
R89	Carbon film	3.3k	RD¼PS 332J
R90	Carbon film	3.3k	RD¼PS 332J
R91	Carbon film	100k	RD¼PS 104J
R92	Carbon film	100k	RD¼PS 104J
R93	Carbon film	1k	RD¼PS 102J
R94	Carbon film	1k	RD¼PS 102J
R95	Carbon film	1k	RD¼PS 102J
R96	Carbon film	1k	RD¼PS 102J
R97	Carbon film	4.7M	RD¼PS 475J
R98	Carbon film	4.7M	RD¼PS 475J
R99	Carbon film	4.7M	RD¼PS 475J
R100	Carbon film	4.7M	RD¼PS 475J

SEMICONDUCTORS

Symbol	Description	Part No.
Q1	Transistor 2SK30AW-Y (2SK34-C)	
Q2	Transistor 2SK30AW-Y (2SK34-C)	
Q3	Transistor 2SA725-G or F (25A763F-5,6)	
Q4	Transistor 2SA725-G or F (2SA763F-5,6)	
Q5	Transistor 2SC1312-H or G (2SC1344-E, F)	
Q6	Transistor 2SC1312-H or G (2SC1344-E, F)	

SWITCHES

Symbol	Description	Part No.
S1	Rotary switch (BASS TURNOVER)	ASD-032-A
S2	Rotary switch (BASS)	ASD-033-A
S3	Rotary switch (TREBLE)	ASD-034-A
S4	Rotary switch (TREBLE TURNOVER)	ASD-035-A

11.6 FUSE ASSEMBLY (AWX-088-0), (AWX-085-0) or (AWX-086-0)

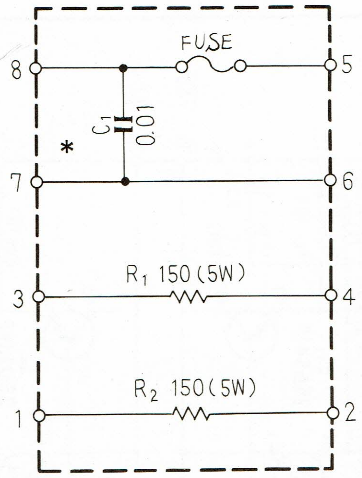

NOTE:
C1 is not eqquipped in AWX-086.

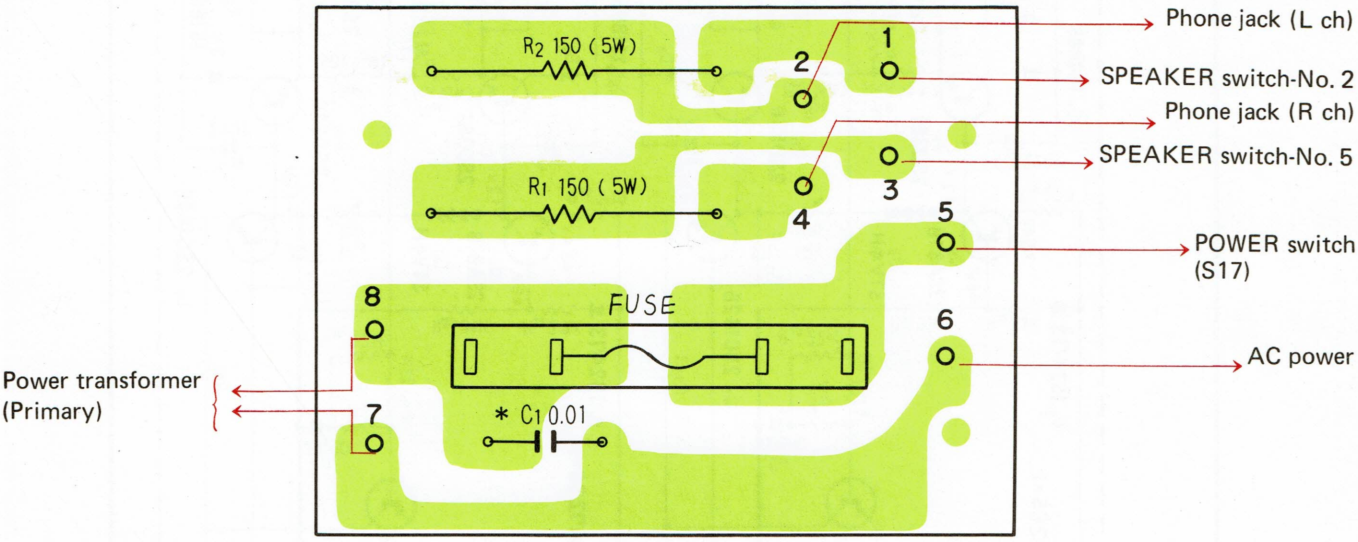

Parts List of Fuse Assembly (AWX-088-0) or (AWX-085-0)

CAPACITOR

Symbol	Description			Part No.
C1	Ceramic	0.01	250V	ACG-001-0

RESISTORS

Symbol	Description			Part No.
R1	Wire wound	150	5W	RT5B 151K
R2	Wire wound	150	5W	RT5B 151K

Parts List of Fuse Assembly (AWX-086-0)

RESISTORS

Symbol	Description			Part No.
R1	Wire wound	150	5W	RT5B 151K
R2	Wire wound	150	5W	RT5B 151K

11.7 POWER AMPLIFIER ASSEMBLY (AWH-041-0)

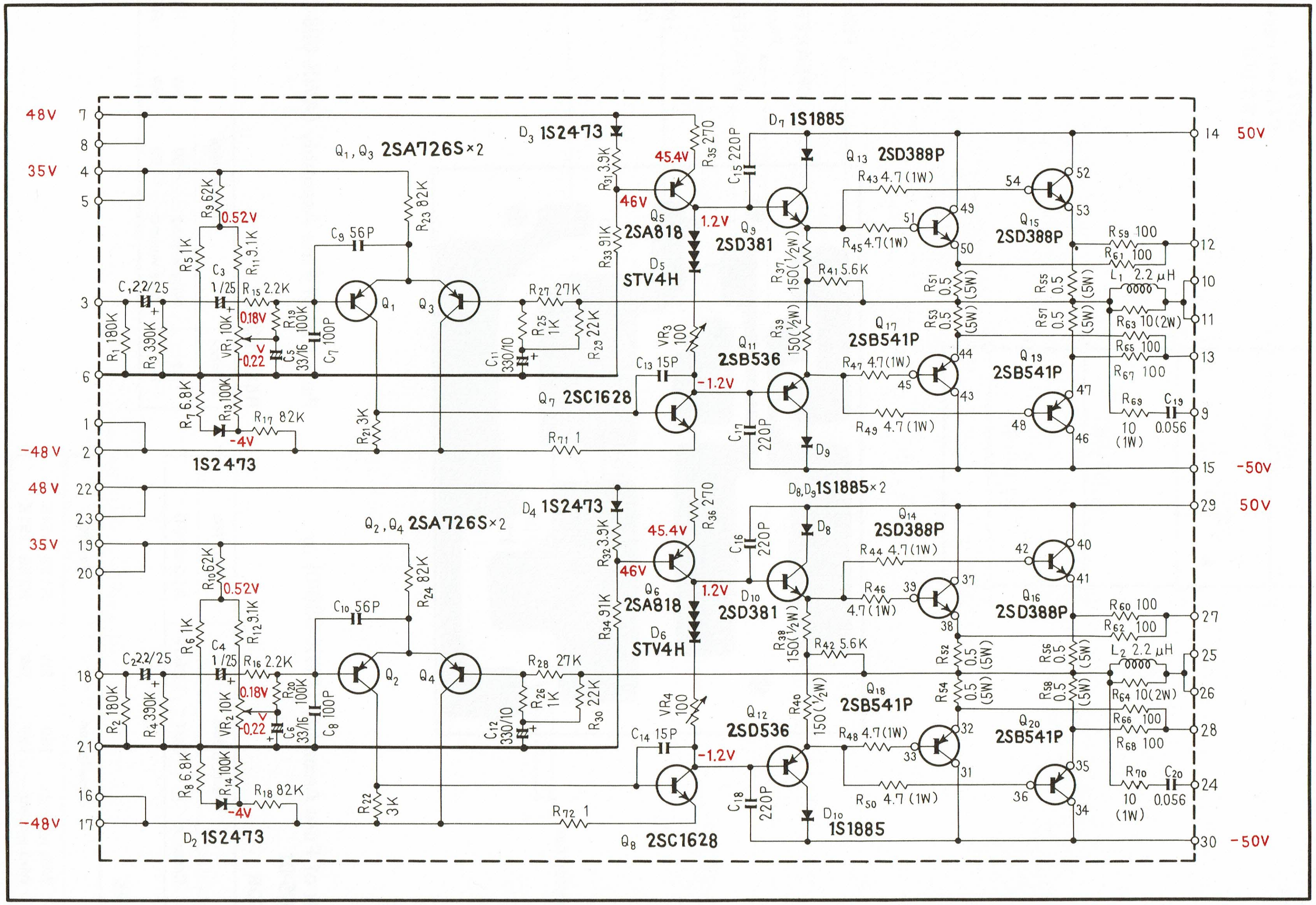

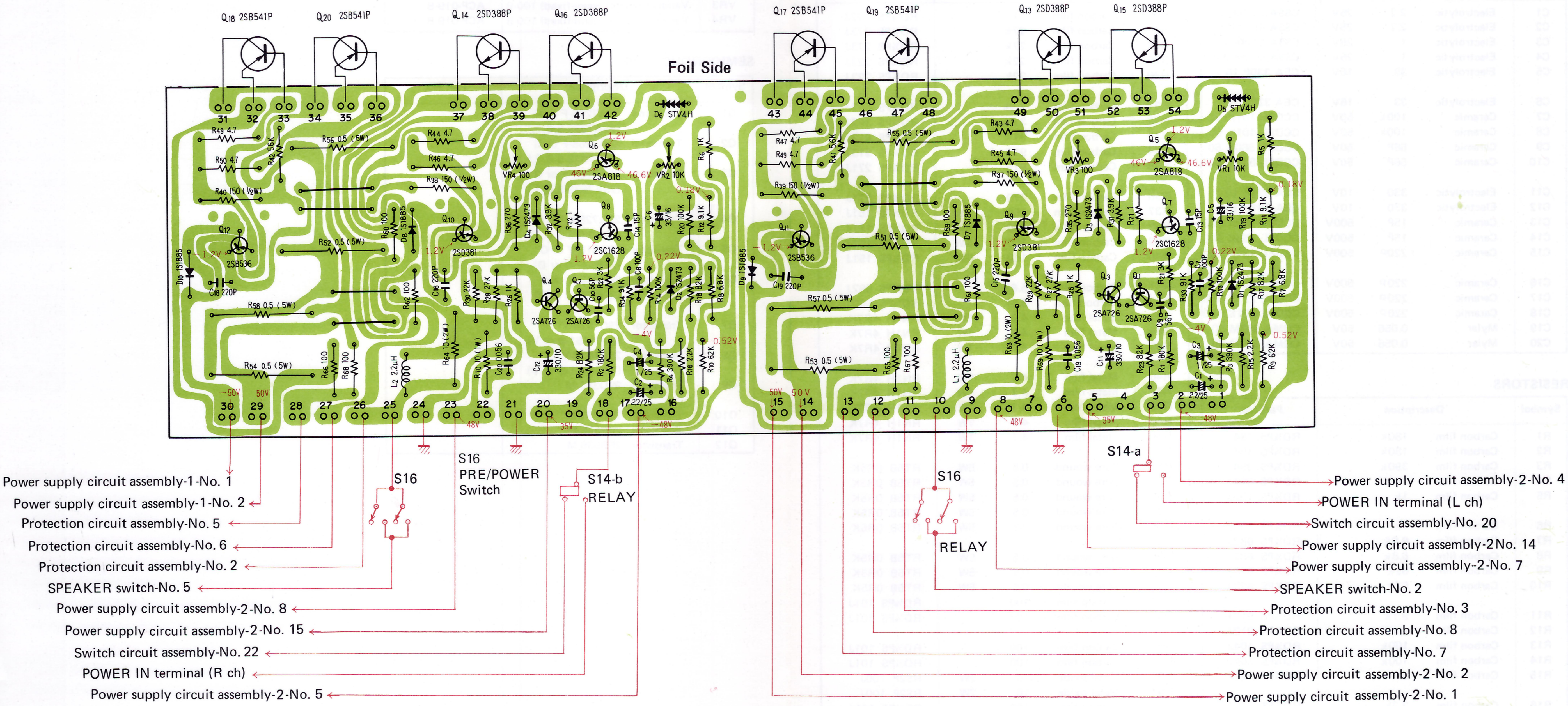
Foil Side
Q18 2SB541P
Q20 2SB541P
Q14 2SD388P
Q16 2SD388P
Q17 2SB541P
Q19 2SB541P
Q13 2SD388P
Q15 2SD388P
S16
PRE/POWER
Switch
S14-b
RELAY
S16
RELAY
S14-a
Power supply circuit assembly-1-No. 1
Power supply circuit assembly-1-No. 2
Protection circuit assembly-No. 5
Protection circuit assembly-No. 6
Protection circuit assembly-No. 2
SPEAKER switch-No. 5
Power supply circuit assembly-2-No. 8
Power supply circuit assembly-2-No. 15
Switch circuit assembly-No. 22
POWER IN terminal (R ch)
Power supply circuit assembly-2-No. 5
Power supply circuit assembly-2-No. 4
POWER IN terminal (L ch)
Switch circuit assembly-No. 20
Power supply circuit assembly-2 No. 14
Power supply circuit assembly-2-No. 7
SPEAKER switch-No. 2
Protection circuit assembly-No. 3
Protection circuit assembly-No. 8
Protection circuit assembly-No. 7
Power supply circuit assembly-2-No. 2
Power supply circuit assembly-2-No. 1

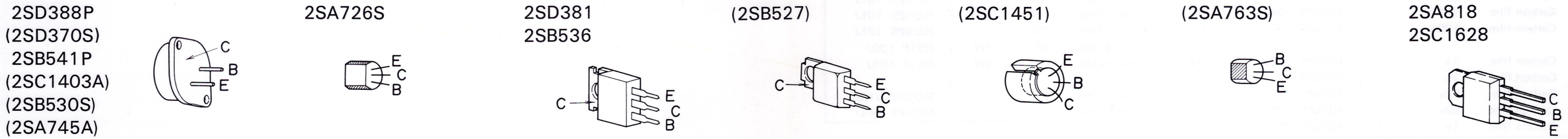
2SD388P
(2SD370S)
2SB541P
(2SC1403A)
(2SB530S)
(2SA745A)
2SA726S
2SD381
2SB536
(2SB527)
(2SC1451)
(2SA763S)
2SA818
2SC1628

Parts List of Power Amplifier Assembly (AWH-041-0)

CAPACITORS

Symbol	Description			Part No.
C1	Electrolytic	2.2	25V	CSSA 2R2M 25
C2	Electrolytic	2.2	25V	CSSA 2R2M 25
C3	Electrolytic	1	25V	CSSA 010M 25
C4	Electrolytic	1	25V	CSSA 010M 25
C5	Electrolytic	33	16V	CEA 330P 16
C6	Electrolytic	33	16V	CEA 330P 16
C7	Ceramic	100k	50V	CCDSL 101K 50
C8	Ceramic	100k	50V	CCDSL 101K 50
C9	Ceramic	56P	50V	CCDSL 560K 50
C10	Ceramic	56P	50V	CCDSL 560K 50
C11	Electrolytic	330	10V	CEA 331P 10
C12	Electrolytic	330	10V	CEA 331P 10
C13	Ceramic	15P	500V	CCDSL 150K 500
C14	Ceramic	15P	500V	CCDSL 150K 500
C15	Ceramic	220P	500V	CCDSL 221K 500
C16	Ceramic	220P	500V	CCDSL 221K 500
C17	Ceramic	220P	500V	CCDSL 221K 500
C18	Ceramic	220P	500V	CCDSL 221K 500
C19	Mylar	0.056	50V	CQMA 563M 50
C20	Mylar	0.056	50V	CQMA 563M 50

RESISTORS

Symbol	Description			Part No.
R1	Carbon film	180k		RD¼PS 184J
R2	Carbon film	180k		RD¼PS 184J
R3	Carbon film	390k		RD¼PS 394J
R4	Carbon film	390k		RD¼PS 394J
R5	Carbon film	1k		RD¼PS 102J
R6	Carbon film	1k		RD¼PS 102J
R7	Carbon film	6.8k		RD¼PS 682J
R8	Carbon film	6.8k		RD¼PS 682J
R9	Carbon film	62k		RD¼PS 623J
R10	Carbon film	62k		RD¼PS 623J
R11	Carbon film	9.1k		RD¼PS 912J
R12	Carbon film	9.1K		RD¼PS 912J
R13	Carbon film	100k		RD¼PS 104J
R14	Carbon film	100k		RD¼PS 104J
R15	Carbon film	2.2k		RD¼PS 222J
R16	Carbon film	2.2k		RD¼PS 222J
R17	Carbon film	82k		RD¼PS 823J
R18	Carbon film	82k		RD¼PS 823J
R19	Carbon film	100k		RD¼PS 104J
R20	Carbon film	100k		RD¼PS 104J
R21	Carbon film	3k		RD¼PS 302J
R22	Carbon film	3k		RD¼PS 302J
R23	Carbon film	82k		RD¼PS 823J
R24	Carbon film	82k		RD¼PS 823J
R25	Carbon film	1k		RD¼PS 102J
R26	Carbon film	1k		RD¼PS 102J
R27	Carbon film	27k		RD¼PS 273J
R28	Carbon film	27k		RD¼PS 273J
R29	Carbon film	22k		RD¼PS 223J
R30	Carbon film	22k		RD¼PS 223J
R31	Carbon film	3.9k		RD¼PS 392J
R32	Carbon film	3.9k		RD¼PS 392J
R33	Carbon film	91k		RD¼PS 913J
R34	Carbon film	91k		RD¼PS 913J
R35	Carbon film	91k		RD¼PS 271J
R36	Carbon film	270		RD¼PS 271J
R37	Carbon film	150	½W	RD½PS 151J
R38	Carbon film	150	½W	RD½PS 151J
R39	Carbon film	150	½W	RD½PS 151J
R40	Carbon film	150	½W	RD½PS 151J
R41	Carbon film	5.6k		RD¼PS 562J
R42	Carbon film	5.6k		RD¼PS 562J
R43	Metal film	4.7	1W	RN1H 4R7K
R44	Metal film	4.7	1W	RN1H 4R7K
R45	Metal film	4.7	1W	RN1H 4R7K
R46	Metal film	4.7	1W	RN1H 4R7K
R47	Metal film	4.7	1W	RN1H 4R7K
R48	Metal film	4.7	1W	RN1H 4R7K
R49	Metal film	4.7	1W	RN1H 4R7K
R50	Metal film	4.7	1W	RN1H 4R7K
R51	Wire wound	0.5	5W	RT5B 0R5K
R52	Wire wound	0.5	5W	RT5B 0R5K
R53	Wire wound	0.5	5W	RT5B 0R5K
R54	Wire wound	0.5	5W	RT5B 0R5K
R55	Wire wound	0.5	5W	RT5B 0R5K
R56	Wire wound	0.5	5W	RT5B 0R5K
R57	Wire wound	0.5	5W	RT5B 0R5K
R58	Wire wound	0.5	5W	RT5B 0R5K
R59	Carbon film	100		RD¼PS 101J
R60	Carbon film	100		RD¼PS 101J
R61	Carbon film	100		RD¼PS 101J
R62	Carbon film	100		RD¼PS 101J
R63	Metal oxide	10	2W	RS2P 100J
R64	Metal oxide	10	2W	RS2P 100J
R65	Carbon film	100		RD¼PS 101J
R66	Carbon film	100		RD¼PS 101J
R67	Carbon film	100		RD¼PS 101J
R68	Carbon film	100		RD¼PS 101J
R69	Metal oxide	10	1W	RS1P 100J
R70	Metal oxide	10	1W	RS1P 100J
R71	Carbon film	1		RD¼PS 010J
R72	Carbon film	1		RD¼PS 010J

POTENTIOMETERS

Symbol	Description	Part No.
VR1	Variable resistor (semi-fixed) 10k-B	ACP-029-A
VR2	Variable resistor (semi-fixed) 10k-B	ACP-029-A
VR3	Variable resistor (semi-fixed) 100-B	ACP-019-B
VR4	Variable resistor (semi-fixed) 100-B	ACP-019-B

SEMICONDUCTORS

Symbol	Description		Part No.
Q1	Transistor	2SA726S-F or G (2SA763S-5,6,7,)	
Q2	Transistor	2SA726S-F or G (2SA763S-5,6,7,)	
Q3	Transistor	2SA726S-F or G (2SA763S-5,6,7,)	
Q4	Transistor	2SA726S-F or G (2SA763S-5,6,7,)	
Q5	Transistor	2SA818-Y or O (2SB527-C or D)	
Q6	Transistor	2SA818-Y or O (2SB527-C or D)	
Q7	Transistor	2SC1628-Y (2SC1451-B or V)	
Q8	Transistor	2SC1628-Y (2SC1451-B or V)	
Q9	Transistor	2SD381-M	
Q10	Transistor	2SD381-M	
Q11	Transistor	2SB536-M	
Q12	Transistor	2SB536-M	

11.8 PROTECTION CIRCUIT ASSEMBLY (AWM-074-0)

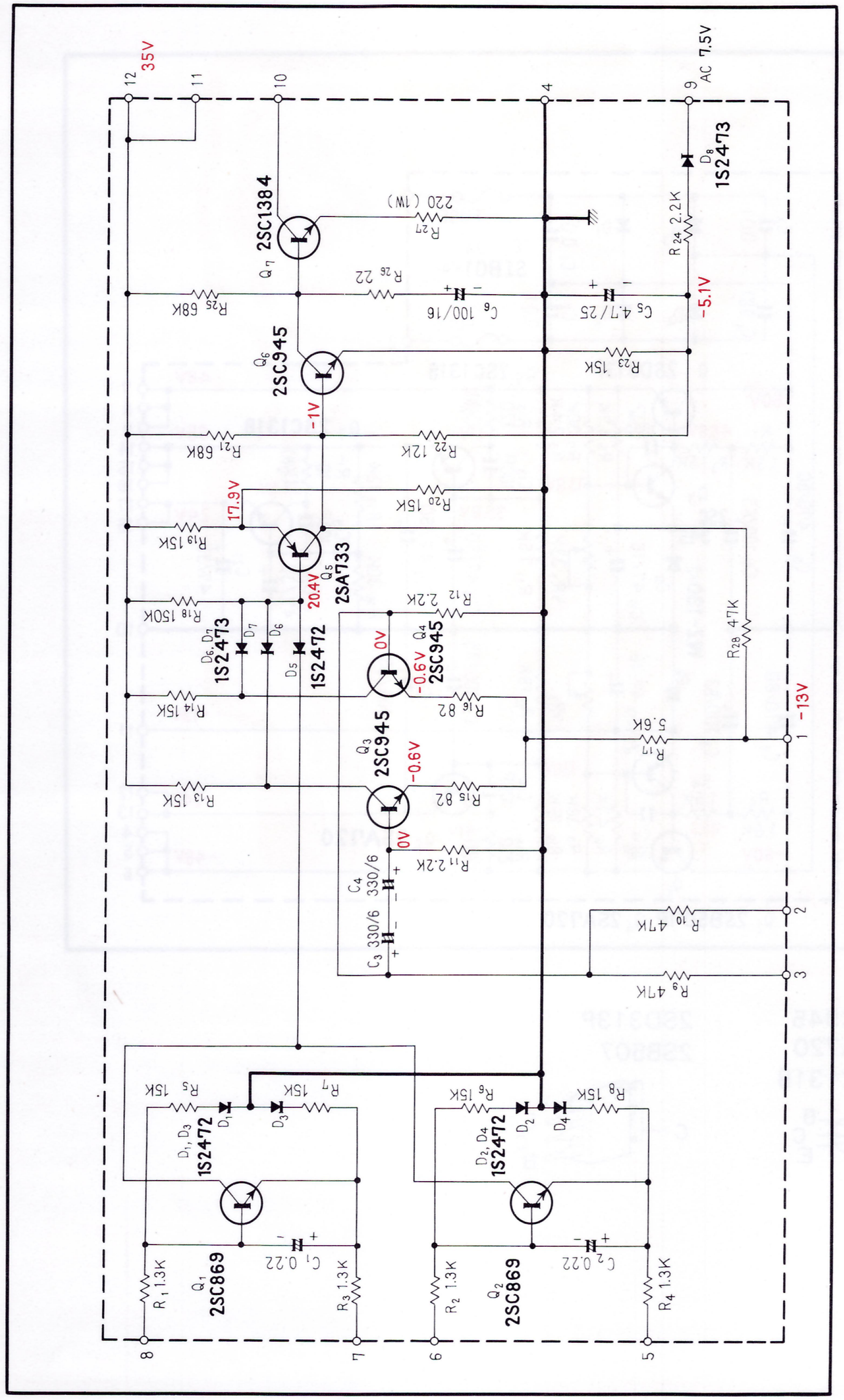

Foil side

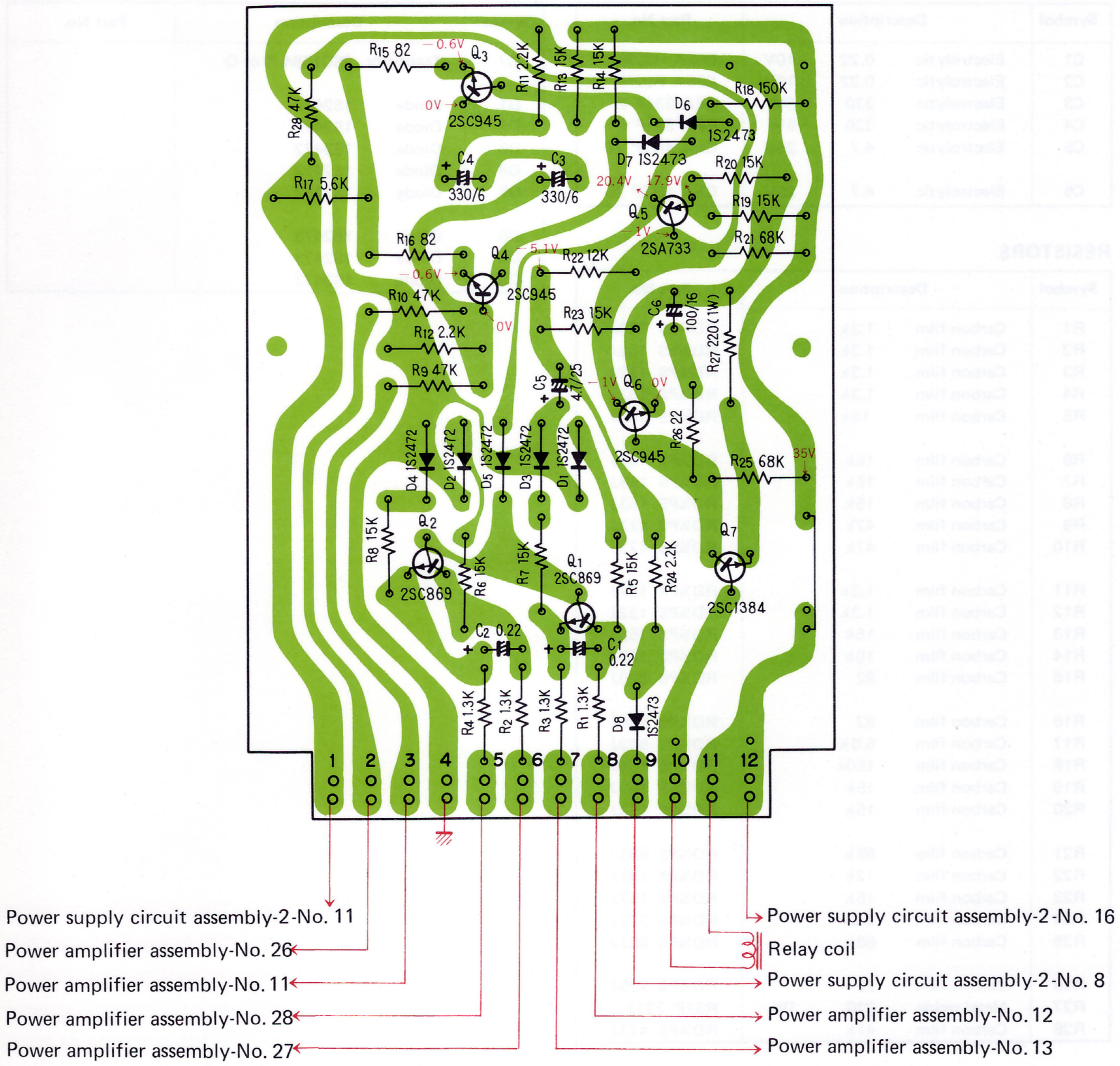

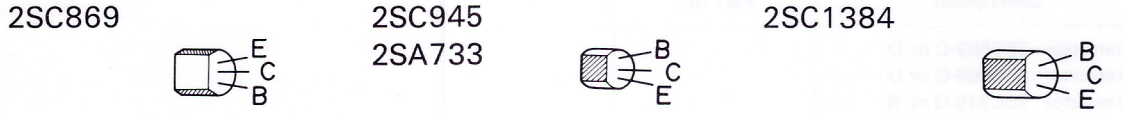

Parts Lest of Protection Circuit Assembly (AWM-074-0)

CAPACITORS

Symbol	Description	Part No.
C1	Electrolytic 0.22 10V	CSSA R22M 10
C2	Electrolytic 0.22 10V	CSSA R22M 10
C3	Electrolytic 330 6V	CEA 331P 6
C4	Electrolytic 330 6V	CEA 331P 6
C5	Electrolytic 4.7 25V	CEA 4R7P 25
C6	Electrolytic 4.7 25V	CEA 4R7P 25

RESISTORS

Symbol	Description	Part No.
R1	Carbon film 1.3k	RD¼PS 132J
R2	Carbon film 1.3k	RD¼PS 132J
R3	Carbon film 1.3k	RD¼PS 132J
R4	Carbon film 1.3k	RD¼PS 132J
R5	Carbon film 15k	RD¼PS 153J
R6	Carbon film 15k	RD¼PS 153J
R7	Carbon film 15k	RD¼PS 153J
R8	Carbon film 15k	RD¼PS 153J
R9	Carbon film 47k	RD¼PS 473J
R10	Carbon film 47k	RD¼PS 473J
R11	Carbon film 1.3k	RD¼PS 132J
R12	Carbon film 1.3k	RD¼PS 132J
R13	Carbon film 15k	RD¼PS 153J
R14	Carbon film 15k	RD¼PS 153J
R15	Carbon film 82	RD¼PS 820J
R16	Carbon film 82	RD¼PS 820J
R17	Carbon film 5.6k	RD¼PS 562J
R18	Carbon film 150k	RD¼PS 154J
R19	Carbon film 15k	RD¼PS 153J
R20	Carbon film 15k	RD¼PS 153J
R21	Carbon film 68k	RD¼PS 683J
R22	Carbon film 12k	RD¼PS 123J
R23	Carbon film 15k	RD¼PS 153J
R24	Carbon film 2.2k	RD¼PS 222J
R25	Carbon film 68k	RD¼PS 683J
R26	Carbon film 22	RD¼PS 220J
R27	Metal oxide 220 1W	RS1P 221J
R28	Carbon film 47k	RD¼PS 473J

SEMICONDUCTORS

Symbol	Description	Part No.
Q1	Transistor 2SC869-C or D	
Q2	Transistor 2SC869-C or D	
Q3	Transistor 2SC945-Q or R	
Q4	Transistor 2SC945-Q or R	
Q5	Transistor 2SA733-Q or R	
Q6	Transistor 2SC945-Q or R	

Symbol	Description	Part No.
Q7	Transistor 2SC1384-R or Q	
D1	Diode 1S2472	
D2	Diode 1S2472	
D3	Diode 1S2472	
D4	Diode 1S2472	
D5	Diode 1S2472	
D6	Diode 1S2473	
D7	Diode 1S2473	
D8	Diode 1S2473	

11.9 POWER SUPPLY CIRCUIT ASSEMBLY-2 (AWR-075-A) or (AWR-090-0)

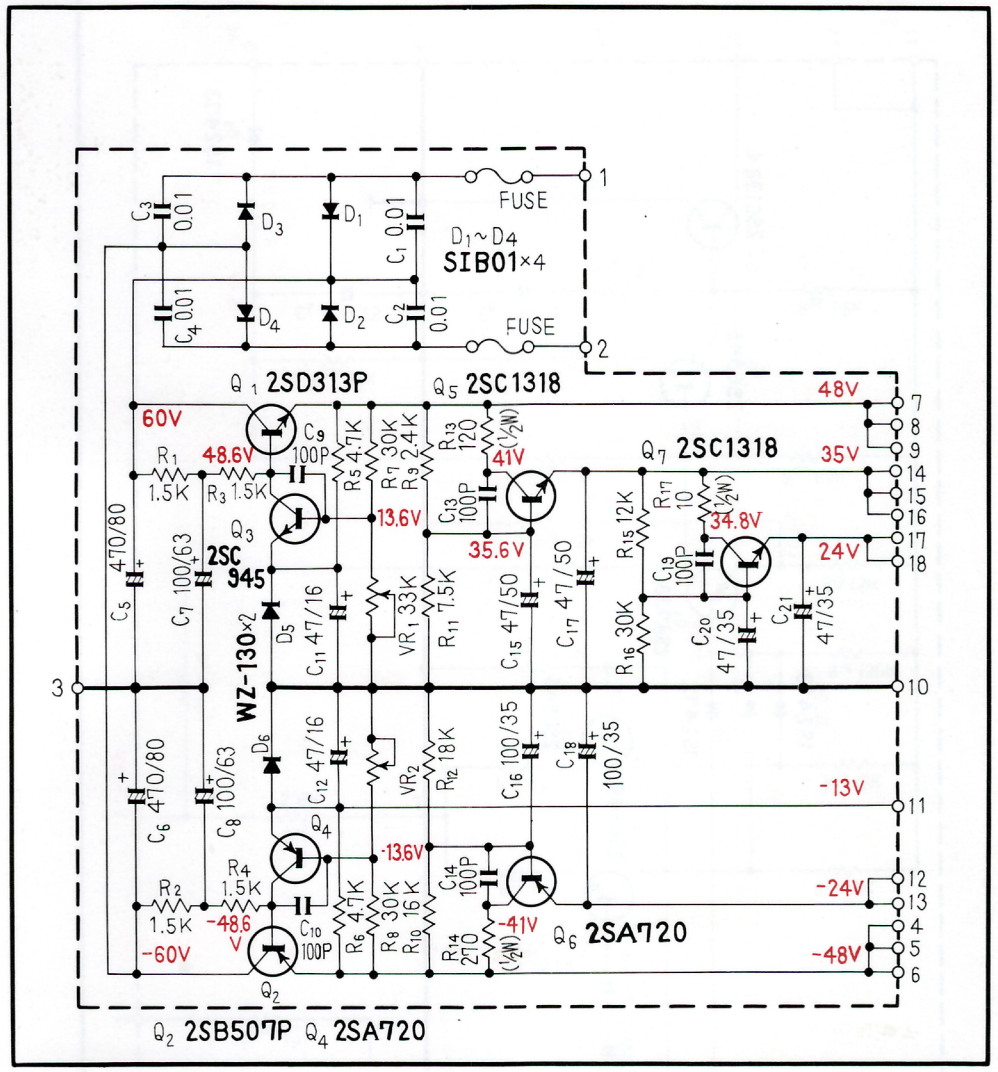

2SC945
2SA720
2SC1318

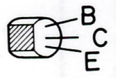

2SD313P
2SB507

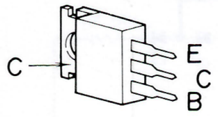

Foil side

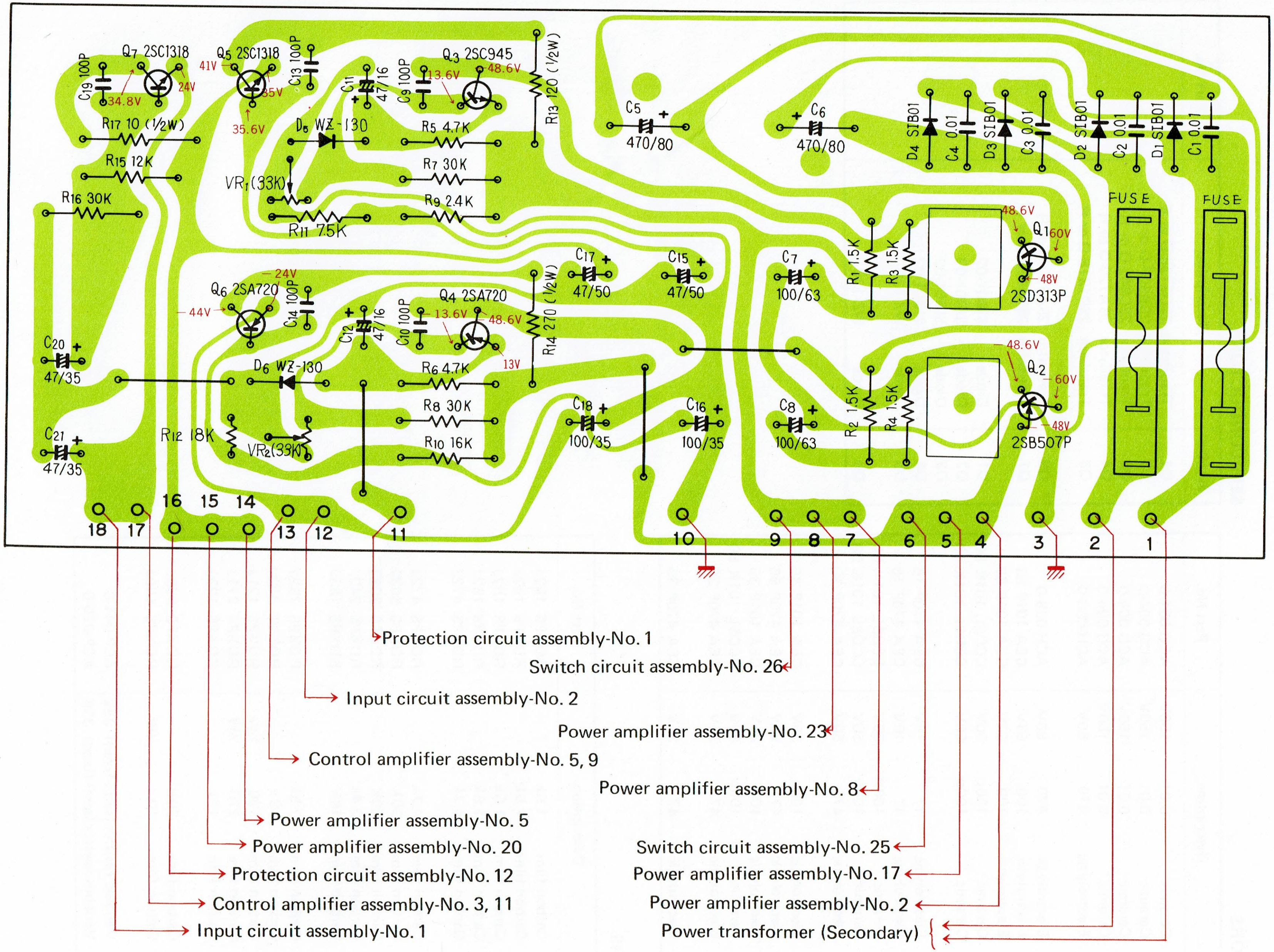

SA-9500

Parts List of Power Supply Circuit Assembly-2 (AWR-075-A) or (AWR-090-0)

CAPACITORS

Symbol	Description			Part No.
C1	Ceramic	0.01	150V	ACG-004-0
C2	Ceramic	0.01	150V	ACG-004-0
C3	Ceramic	0.01	150V	ACG-004-0
C4	Ceramic	0.01	150V	ACG-004-0
C5	Electrolytic	470	80V	ACH-038-0
C6	Electrolytic	470	80V	ACH-038-0
C7	Electrolytic	100	63V	CEA 101P 63
C8	Electrolytic	100	63V	CEA 101P 63
C9	Ceramic	100p	50V	CCDSL 101K 50
C10	Ceramic	100p	50V	CCDSL 101K 50
C11	Electrolytic	47	16V	CEA 470P 16
C12	Electrolytic	47	16V	CEA 470P 16
C13	Ceramic	100p	50V	CCDSL 101K 50
C14	Ceramic	100p	50V	CCDSL 101K 50
C15	Electrolytic	47	50V	CEA 470P 50
C16	Electrolytic	100	35V	CEA 101P 35
C17	Electrolytic	47	50V	CEA 470P 50
C18	Electrolytic	100	35V	CEA 101P 35
C19	Ceramic	100p	50V	CCDSL 101K 50
C20	Electrolytic	47	35V	CEA 470P 35
C21	Electrolytic	47	35V	CEA 470P 35

SEMICONDUCTORS

Symbol	Description		Part No.
Q1	Transistor	2SD313P-D or E	
Q2	Transistor	2SB50P-D or E	
Q3	Transistor	2SC945-Q or R	
Q4	Transistor	2SA720-Q or R	
Q5	Transistor	2SC1318-Q or R	
Q6	Transistor	2SA720-Q or R	
Q7	Transistor	2SC1318-Q or R	
D1	Diode	SIB01-02	
D2	Diode	SIB01-02	
D3	Diode	SIB01-02	
D4	Diode	SIB01-02	
D5	Diode	WZ-130	
D6	Diode	WZ-130	

RESISTORS

Symbol	Description			Part No.
R1	Carbon film	1.5k		RD¼PS 152J
R2	Carbon film	1.5k		RD¼PS 152J
R3	Carbon film	1.5k		RD¼PS 152J
R4	Carbon film	1.5k		RD¼PS 152J
R5	Carbon film	4.7k		RD¼PS 472J
R6	Carbon film	4.7k		RD¼PS 472J
R7	Carbon film	30k		RD¼PS 303J
R8	Carbon film	30k		RD¼PS 303J
R9	Carbon film	2.4k		RD¼PS 242J
R10	Carbon film	16k		RD¼PS 163J
R11	Carbon film	7.5k		RD¼PS 752J
R12	Carbon film	18k		RD¼VS 183J
R13	Carbon film	120	½W	RD½PS 121J
R14	Carbon film	270	½W	RD½PS 271J
R15	Carbon film	12k		RD¼PS 123J
R16	Carbon film	30k		RD¼PS 303J
R17	Carbon film	10	½W	RD½PS 100J
VR1	Variable resistor (semi-fixed)	33k		ACP-044-0
VR2	Variable resistor (semi-fixed)	33k		ACP-025-0

11.10 POWER SUPPLY CIRCUIT ASSEMBLY-1 (AWR-074-A) or (AWR-089-0)

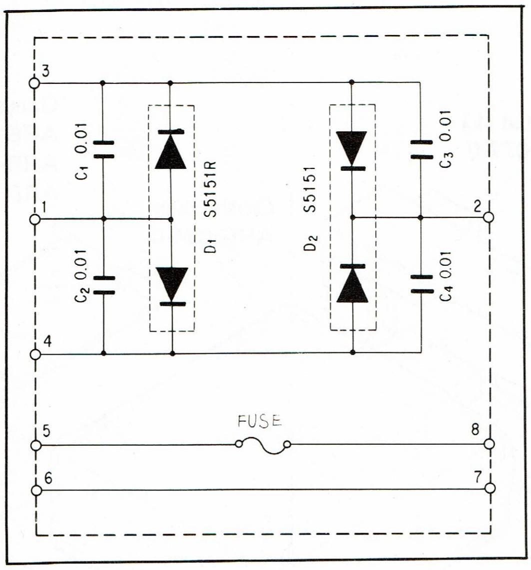

Foil Side

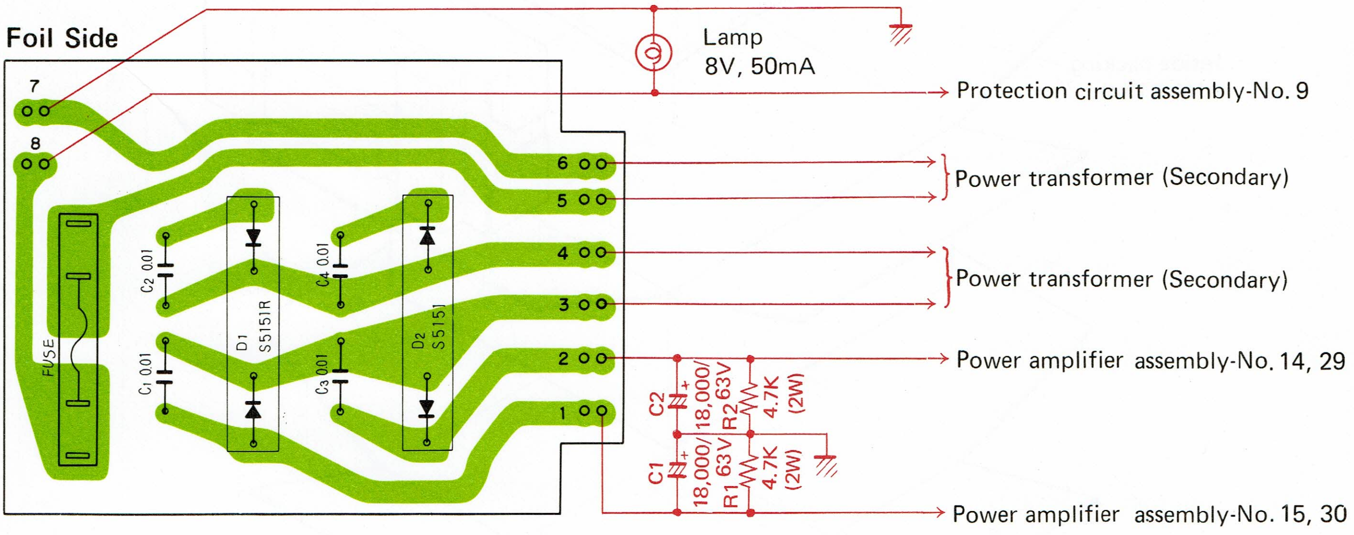

Parts List of Power Supply Circuit Assembly-1 (AWR-074-A) or (AWR-089-0)

CAPACITORS

Symbol	Description			Part No.
C1	Ceramic	0.01	150V	ACG-004-0
C2	Ceramic	0.01	150V	ACG-004-0
C3	Ceramic	0.01	150V	ACG-004-0
C4	Ceramic	0.01	150V	ACG-004-0

SEMICONDUCTORS

Symbol	Description		Part No.
D1	Diode	S5151R	
D2	Diode	S5151	

12. PACKING

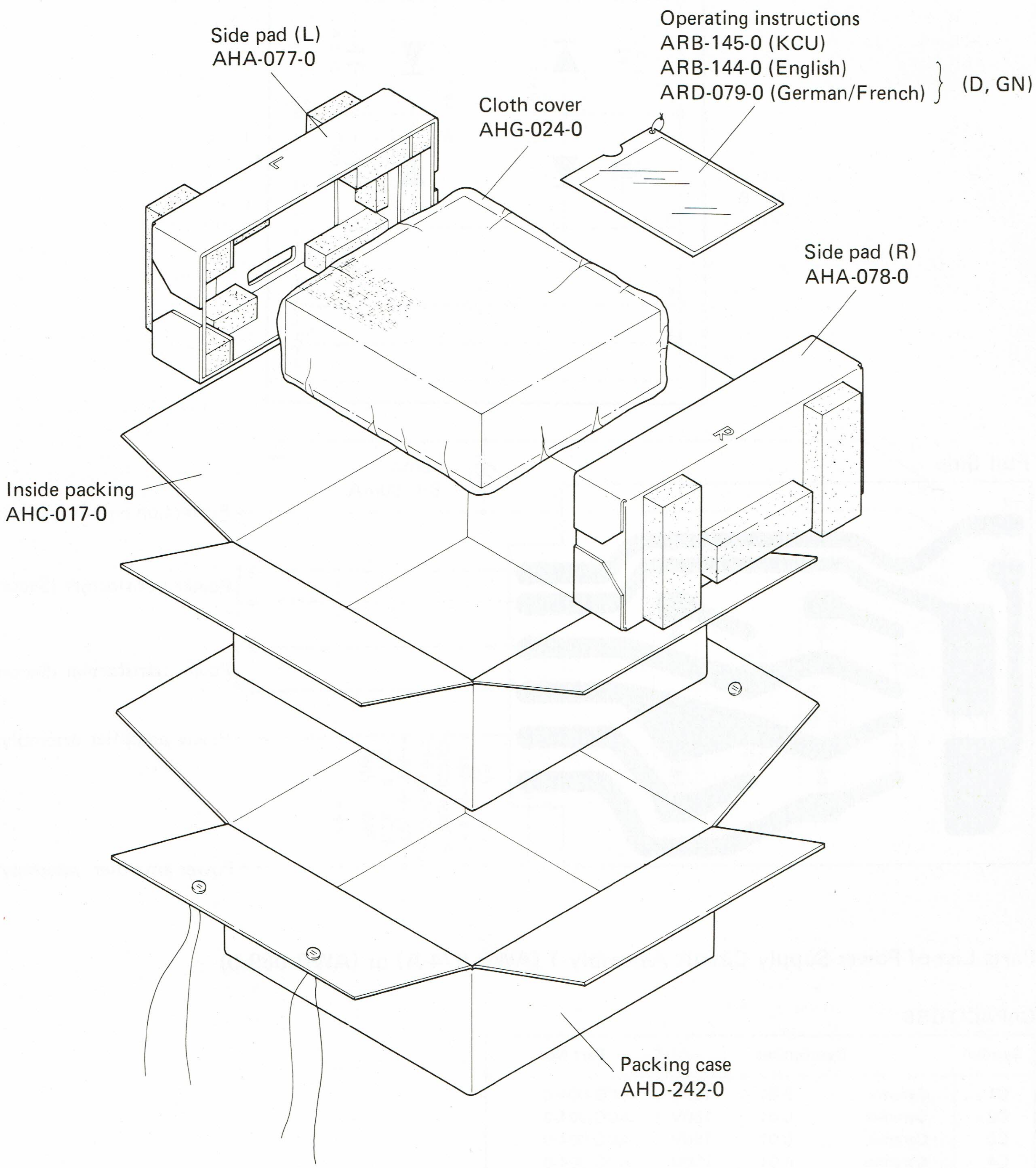
Side pad (L)
AHA-077-0
Operating instructions
ARB-145-0 (KCU)
ARB-144-0 (English)
ARD-079-0 (German/French)
(D, GN)
Cloth cover
AHG-024-0
Side pad (R)
AHA-078-0
Inside packing
AHC-017-0
Packing case
AHD-242-0

13. PARTS LIST OF EXPLODED VIEW

Parts No.	Parts Name
AAB-046	Knob
AAB-084	Knob
AAB-086	Knob
AAB-089	Knob
AAD-040	Knob
AAD-086	Knob
ABA-002	Screw M3x8
ABA-012	Screw M4x8
ABA-079	Screw M4x8
ABA-083	Screw M4x12
ABE-001	Internal toothed washer
ABE-006	Internal toothed washer
ABN-009	Both
ACH-047	Electrolytic capacitor
ACV-144	Variable resistor
ACV-146	Variable resistor
ACV-148	Variable resistor
ADG-010	AC Power cord (D)
ADG-011	AC Power cord (KCU)
AEB-051	Rubber holder
AEC-076	Insulating wafer
AEC-079	AC Power cord stopper (D, KCU)
AEC-085	Insulated nut
AEC-178	Foot assembly
AEC-182	Phono jack cover
AEC-209	AC outlet cover (D, KCU)
AEL-051	Lamp with wire 8V 50mA
AKB-023	Phone jack 4P
AKB-024	Phone jack 6P
AKE-012	Binding post
AKE-025	Speaker output terminal
AKH-001	Transistor socket
AKM-016	Line voltage selector plug (D)
AKP-005	AC outlet socket (KCU, D)
AKP-008	AC inlet socket (GN)
AKP-010	Line voltage selector socket (D)
ANB-327	Front panel assembly
ANE-072	Top cover
ANE-073	Transistor cover
ANF-291	P.C board clamp
ANH-231	Front shield cover
ANK-082	Socket cover (D)
ASB-047	Rotary switch
ASD-020	Rotary switch
ASD-021	Rotary switch
ASD-032	Rotary switch
ASD-033	Rotary switch
ASD-034	Rotary switch
ASD-035	Rotary switch
ASG-043	Push switch (KCU)

Parts No.	Parts Name
ASG-085	Push switch (D, GN)
ASH-012	Slide switch
ASK-084	Lever switch
ASK-085	Lever switch
ASK-086	Lever switch
ASK-087	Lever switch
ASK-092	Lever switch
ASR-007	Relay
ATT-236	Power transformer (D)
ATT-237	Power transformer (GN)
ATT-238	Power transformer (KCU)
AWG-032	Control amplifier assembly
AWH-041	Power amplifier assembly
AWK-039	Input circuit assembly
AWM-074	Protection circuit assembly
AWR-074	Power supply circuit assembly
AWR-075	Power supply circuit assembly-2 (KCU, D)
AWR-089	Power supply circuit assembly-1 (GN)
AWR-090	Power supply circuit assembly-1 (GN)
AWS-082	Switch circuit assembly
AWX-073	Volume circuit assembly
AWX-073	Volume circuit assembly (KCU)
AWX-085	Fuse assembly (GN)
AWX-086	Fuse assembly (KCU)
AWX-088	Fuse assembly (D)
B22-016	Washer 9mm
B71-004	Nut 9mm
B71-010	Nut 7mm
E32-045	Insulated spacer
E34-004	Insulated washer
K72-020	Phone jack
K72-026	Phone jack
M45-086	Spacer
2SA745A	Transistor
2SB530S	Transistor
2SB541P	Transistor
2SC1403A	Transistor
2SD370S	Transistor
2SD388P	Transistor

PIONEER ELECTRONIC CORPORATION
4-1, 1-Chome, Meguro, Meguro-ku, Tokyo 153, Japan
U.S. PIONEER ELECTRONICS CORPORATION
75 Oxford Drive, Moonachie, New Jersey 07074,U.S.A.
PIONEER ELECTRONIC (EUROPE) N.V.
Meir-Center Meir 21, 2000 Antwerp, Belgium
PIONEER ELECTRONICS AUSTRALIA PTY. LTD.
256-8 City Road, South Melbourne, Victoria 3205, Australia

© JUN 1975 Printed in Japan

<75F04Y71L>